C. No. AENG 251 **2 (1+1)**

Farm Machinery and Power

Lecture Outlines

Lecture No.1

Farm power - sources of different farm power, advantages and disadvantages.

1.0 Farm power

Various types of agricultural operations performed on a farm can be broadly classified as:

1. Tractive work – such as seed bed preparation, cultivation, harvesting and transportation.

2. Stationary work- such as silage cutting, feed grinding, threshing, winnowing and lifting of irrigation water.

These operations are done by different sources of power, namely human, animal, mechanical power (oil engines and tractors), electrical power and renewable energy (solar energy, biogas, biomass and wind energy).

1.1 Human power

Human beings are the main sources of power for operating small tools and implements at the farm. They are also employed for doing stationary work like threshing, winnowing, chaff cutting and lifting irrigation water. Of the total rural population in India, only 30% is available for doing farm work. The indications are that the decline in number of labourers employed for agriculture. On an average, a man develops nearly 0.1 horse power (hp).

Advantages: Easily available and used for all types of work.

Disadvantages: Costliest power compared to all other farms of power, very low efficiency, requires full maintenance when not in use and affected by weather condition and seasons.

1.2 Animal power

The most important source of power on the farm all over the world and particularly in India is animal. It is estimated that, nearly 80% of the total draft power used in agriculture throughout the World is still provided by animals. India is having 22.68 crore cattle, which is the highest in the World. Mainly, bullocks and buffaloes happen to be the principle sources of animal power on Indian farms. However, camels, horses, donkeys and elephants are also used for the farm work. The average force a bullock can exert is nearly

equal to one tenth of its body weight. Power developed by an average pair of bullocks is about 1 hp for usual farm work.

Advantages:

1. Easily available.
2. Used for all types of work.
3. Low initial investment.
4. Supplies manure to the field and fuels to farmers.
5. Live on farm produce.

Disadvantages:

1. Not very efficient.
2. Seasons and weather affect the efficiency.
3. Cannot work at a stretch.
4. Require full maintenance when there is no farm work.
5. Creates unhealthy and dirty atmosphere near the residence.
6. Very slow in doing work.

1.3 Mechanical power

It is available through tractors, power tillers and oil engines. The oil engine is a highly efficient device for converting fuel into useful work. The efficiency of diesel engine varies between 32 and 38%, whereas that of the carburetor engine (Petrol engine) is in the range of 25 and 32%. In recent years, diesel engines, tractors and power tillers have gained considerable popularity in agricultural operations. It is estimated that, about one million tractors of 25 hp range are in use for various agricultural operations in India. Similarly, total number of oil engines of 5 hp for stationery work is 60 lakhs. Normally, stationery diesel engines are used for pumping water, flour mills, oil ghanis, cotton gins, chaff cutter, sugarcane crusher, threshers and winnowers etc.,

Advantages: Efficiency is high; not affected by weather; cannot run at a stretch; requires less space and cheaper form of power.

Disadvantages: Initial capital investment is high; fuel is costly and repairs and maintenance needs technical knowledge.

1.4 Electrical power

Now-a- day's electricity has become a very important source of power on farms in various states of the country. Electrical power is used mostly for

running electrical motors for pumping water, dairy industry, cold storage, farm product processing, and cattle feed grinding. It is clean source of power and smooth running. The operating cost remains almost constant throughout its life. Its maintenance and operation need less attention and care. On an average, about 1/10th of the total electrical power generated in India, is consumed for the farm work, approximately it is 4600 megawatt.

Advantages: Very cheap form of power; high efficiency; can work at a stretch; maintenance and operating cost is very low and not affected by weather conditions.

Disadvantages: Initial capital investment is high; require good amount of technical knowledge and it causes great danger, if handled without care,

1.5 Renewable energy

It is the energy mainly obtained from biomass; biogas, solar and wind are mainly used in agriculture for power generation and various agricultural processing operations. It can b used for lighting, power generation, water heating, drying, greenhouse heating, water distillation, refrigeration and diesel engine operation. This type of energy is inexhaustible in nature. The availability of wind energy for farm work is quite limited. Where the wind velocity is more than 32 kmph, wind mills can be used for lifting water. Main limitation for this source is uncertainty. Average capacity of a wind mill would be about 0.5 hp. There are about 2540 windmills in India. It is the cheapest sources of farm power available in India.

Lecture No.2

Internal combustion engine - different components and their functions, working principle of four stroke and two stroke cycle engine, comparison between diesel and petrol engine, difference between four and two stroke engine.

Heat engine is a machine for converting heat, developed by burning fuel into useful work (or) it is equipment which generates thermal energy and transforms it into mechanical energy. Heat engine is of two types: (i) External combustion engine, and (ii) Internal combustion engine.

2.0 External combustion engine: It is the engine designed to derive its power from the fuel, burnt outside the engine cylinder. Here combustion process uses heat in the form of steam, which is generated in a boiler, placed entirely separate from the working cylinder.

2.1 Internal combustion engine (I. C. Engine): It is the engine designed to derive its power from the fuel, burnt within the engine cylinder. Here combustion of fuel and generation of heat takes place within the cylinder of the engine.

2.2 Principle of I.C. Engine

A mixture of fuel with correct amount of air is exploded in an engine cylinder which is closed at one end. As a result of explosion, heat is released and this causes the pressure of the burning gases to increase. This pressure increase, forces a close fitting piston to move down the cylinder. This movement of piston is transmitted to a crankshaft by a connecting rod so that the crankshaft turns a flywheel. To obtain continuous rotation of the crankshaft this explosion has to be repeated. Before this, the burnt gases have to be expelled from the cylinder. At the same time the fresh charge of fuel and air must be admitted and the piston must be returns back to its starting position. This sequence of events is known as working cycle.

2.3 Working of I.C. Engine

I.C. engine converts the reciprocating motion of piston into rotary motion of the crankshaft by means of connecting rod. The piston which reciprocates in the cylinder is very close fit in the cylinder. Rings are inserted in the circumferential grooves of the piston to prevent leakage of gases from sides

of the piston. Usually a cylinder is bored in a cylinder block. A gasket, made of copper sheet or asbestos is inserted between the cylinder and the cylinder head. The combustion space is provided at the top of the cylinder head where combustion takes place. There is a rod called connecting rod for connecting the piston and the crankshaft. A pin called gudgeon pin or wristpin is provided for connecting the piston and the connecting rod of the engine. The end of the connecting rod which fits over the gudgeon pin is called small end of the connecting rod. The other end which fits over the crank pin is called big end of the connecting rod. The crankshaft rotates in main bearings which are fitted in the crankcase. A flywheel is provided at one end of the crankshaft for smoothening the uneven torque, produced by the engine. There is an oil sump at the bottom of the engine which contains lubricating oil for lubricating different parts of the engine (Fig.1).

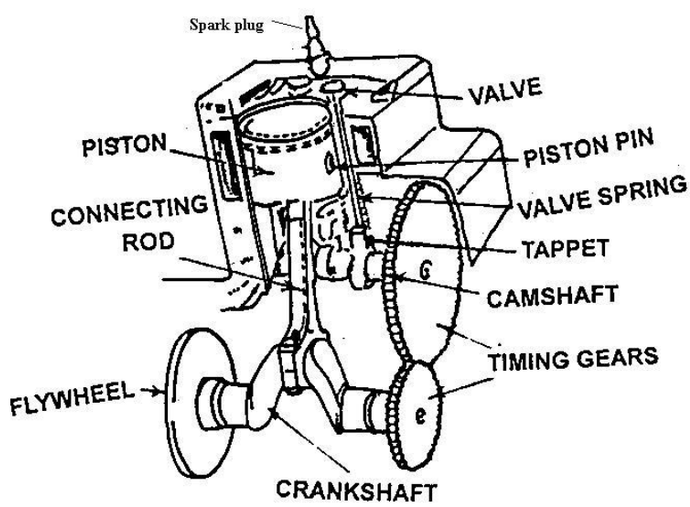

Fig. 1. Working components of I.C.Engine

2.4 Engine components

Internal combustion engine consists of the following parts (Fig.2):

Cylinder: It is a part of the engine which confines the expanding gases and forms the combustion space. It is the basic part of the engine. It provides space in which piston operates to suck the air or air-fuel mixture. The piston compresses the charge and the gas is allowed to expand in the cylinder, transmitting power for useful work. Cylinders are usually made of high grade cast iron.

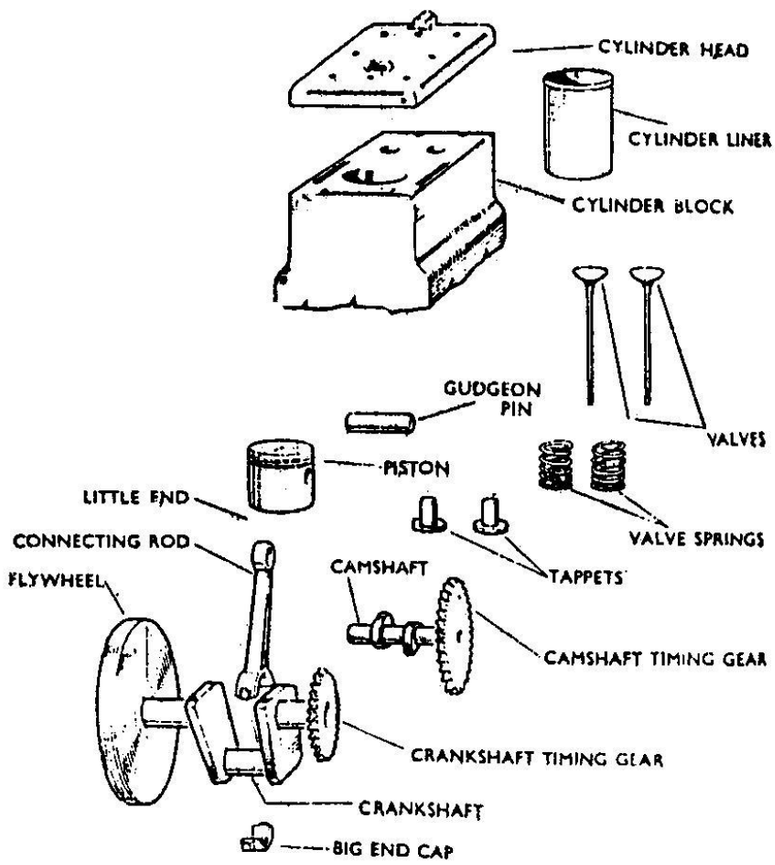

Fig. 2.Components of I.C.Engine

Cylinder block: It is the solid casting which includes the cylinder and water jackets (cooling fins in the air cooled engines).

Cylinder head: It is detachable portion of an engine which covers the cylinder and includes the combustion chamber, spark plugs and valves.

Cylinder liner or sleeve: It is a cylindrical lining either wet or dry which is inserted in the cylinder block in which the piston slides. Cylinder liners are fitted in the cylinder bore and they are easily replaceable. The overhauling and repairing of the engines, fitted with liners is easy and economical. Liners are classified as: dry liner, and wet liner. *Dry liner* makes metal to metal contact with the cylinder block casting. *Wet liners* come in contact with the cooling water, whereas dry liners do not come in contact with cooling water.

Piston: It is a cylindrical part closed at one end which maintains a close sliding fit in the engine cylinder. It is connected to the connecting rod by a piston pin. The force of the expanding gases against the closed end of the piston, forces the piston down in the cylinder. This causes the connecting rod to rotate the crankshaft. Cast iron is chosen due to its high compressive strength, low coefficient of expansion, resistance to high temperature, ease of

casting and low cost. Aluminum and its alloys are preferred mainly due to its lightness.

Head (crown) of piston: It is top of the piston.

Skirt: It is that portion of the piston below the piston pin which is designed to absorb the side movements of the piston.

Piston ring: It is a split expansion ring, placed in the groove of the piston. Piston rings are fitted in the grooves, made in the piston. They are usually made of cast iron or pressed steel alloy. The functions of the ring are as follows:

(a) It forms a gas tight combustion chamber for all positions of piston.

(b) It reduces contact area between cylinder wall and piston wall for preventing friction losses and excessive wear.

(c) It controls the cylinder lubrication.

(d) It transmits the heat away from the piston to the cylinder walls.

Piston rings are of two types: (a) Compression ring and (b) Oil ring.

(a) **Compression ring**. Compression rings are usually plain, single piece and are always placed in the grooves, nearest to the piston head.

(b) **Oil ring**. Oil rings are grooved or slotted and are located either in lowest groove above the piston pin or in a groove above the piston skirt. They control the distribution of lubrication oil in the cylinder and the piston. They prevent excessive oil consumption also. Oil ring is provided with small holes through which excess oil returns back to the crankcase chamber.

Piston pin: It is also called wrist pin or gudgeon pin. Piston pin is used to join the connecting rod to the piston. It provides a flexible or hinge like connection between the piston and the connecting rod. It is usually made of case hardened alloy steel.

Connecting rod: It is a special type of rod, one end of which is attached to the piston and the other end to the crankshaft. It transmits the power of combustion to the crankshaft and makes it rotate continuously. It is usually made of drop forged steel.

Crankshaft: It is the main shaft of an engine which converts the reciprocating motion of the piston into rotary motion of the flywheel. Usually the crankshaft is made of drop forged steel or cast steel. The space that supports the crankshaft in the cylinder block is called main journal, whereas the part to which connecting rod is attached is known as crank journal.

Fly wheel: Fly wheel is made of cast iron. Its main functions are as follows:

(a) It stores energy during power stroke and returns back the same energy during the idle strokes, providing a uniform rotary motion by virtue of its inertia.

(b) It also carries ring gear that meshes with the pinion of the starting motor.

(c) The rear surface of the flywheel serves as one of the pressure surfaces for the clutch plate.

(d) Engine timing marks are usually stamped on the flywheel, which helps in adjusting the timing of the engine.

(e) Some times the flywheel serves the purpose of a pulley for transmitting power.

Crankcase: The crankcase is that part of the engine which supports and encloses the crankshaft and camshaft. It provides a reservoir for the lubricating oil of the engine.

Cam shaft: It is a shaft which raises and lowers the inlet and exhaust valves at proper time. Camshaft is driven by crankshaft by means of gears, chains or sprockets. The speed of the camshaft is exactly half the speed of the crankshaft in four stroke engine. Camshaft operates the ignition timing mechanism, lubricating oil pump and fuel pump. It is mounted in the crankcase, parallel to the crankshaft.

Timing gear: Timing gear is a combination of gears, one gear of which is mounted at one end of the camshaft and other gear on the end of the end of the crankshaft. Camshaft gear is bigger in size than that of the crankshaft gear and it has twice as many teeth as that of the losing crankshaft gear. For this reason, this gear is commonly called Half time gear. Timing gear controls the timing of ignition, timing of opening and closing of valves as well as fuel injection timing.

Inlet manifold: It is that part of the engine through which air or air-fuel mixture enters into the engine cylinder. It is fitted by the side of the cylinder head.

Exhaust manifold: It is that part of the engine through which exhaust gases go out of the engine cylinder. It is capable of with-standing high temperature of burnt gases. It is fitted by the side of the cylinder head.

2.5 Internal engine classification

Internal combustion engines are classified in two types depending on the period required to complete a cycle of operation. They are four stroke and two stroke engines.

1. When the cycle is completed in two revolutions of the crankshaft, it is called *four stroke cycle engines*.
2. When the cycle is completed in one revolution of the crankshaft, it is called *two stroke cycle engines*.

I.C. engines are of two types: (i) Petrol engine (carburetor type, spark ignition engine), and (ii) diesel engine (compression ignition engine).

Petrol engine: It is the engine, in which liquid fuel is atomized, vaporized and mixed with air in correct proportion before entering onto the engine cylinder during suction stroke. The fuel is ignited in the cylinder by an electric spark.

Diesel engine: In this engine, during suction stroke, only air is entered into the cylinder and compressed. The fuel is injected through fuel injectors and ignited by heat of compression.

2.5.1 Working of four stroke cycle engine

In four stroke cycle engine, all the events taking place inside the engine cylinder are completed in four strokes of the piston i.e., suction, compression, power and exhaust stroke (Fig.3). This engine has got valves for controlling the inlet of charge and outlet of exhaust gases. In two stroke cycle engine, all the events take place in two strokes of the piston.

The four strokes of the piston are as follows:

1. Suction stroke: During this stroke, only air or mixture of air and fuel are drawn inside the cylinder. The charge enters the engine through inlet valve which remains open during admission of charge. The exhaust valve remains closed during this stroke. The pressure in the engine cylinder is less than atmospheric pressure during this stroke.

2. Compression strike: The charge taken in the cylinder is compressed by the piston during this stroke. The entire charge of the cylinder is compressed to a small volume contained in the clearance volume of the cylinder. If only air is compressed in the cylinder (as in the case of diesel engine), the fuel is injected at the end of the compression stroke. The ignition takes place due to high pressure and temperature. If the mixture of air and fuel is compressed in the cylinder (as in the case of spark ignition engine i.e., petrol engine), the mixture is ignited by spark plug. After ignition, tremendous amount of heat is generated, causing very high pressure in the cylinder which pushes the piston backward for useful work. Both valves are closed during this stroke.

3. Power stroke: During power stroke, the high pressure developed due to combustion of fuel causes the piston to be forced downwards. The connecting rod with the help of crankshaft transmits the power to the transmission system for useful work. Both valves are closed during this stroke.

4. Exhaust stroke: Exhaust gases go out through exhaust valves during this stroke. All the burnt gases go out of the engine and the cylinder becomes ready to receive the fresh charge. The inlet valve is closed and exhaust valve remains open during this stroke. The exhaust valve is closed just after the end of the exhaust stroke, and the inlet valve is opened just before the burning of the suction stroke to repeat the cycle of operation.

Thus it is found that out of four strokes, there is only one power stroke and three idle strokes. The power stroke supplies necessary momentum for useful work.

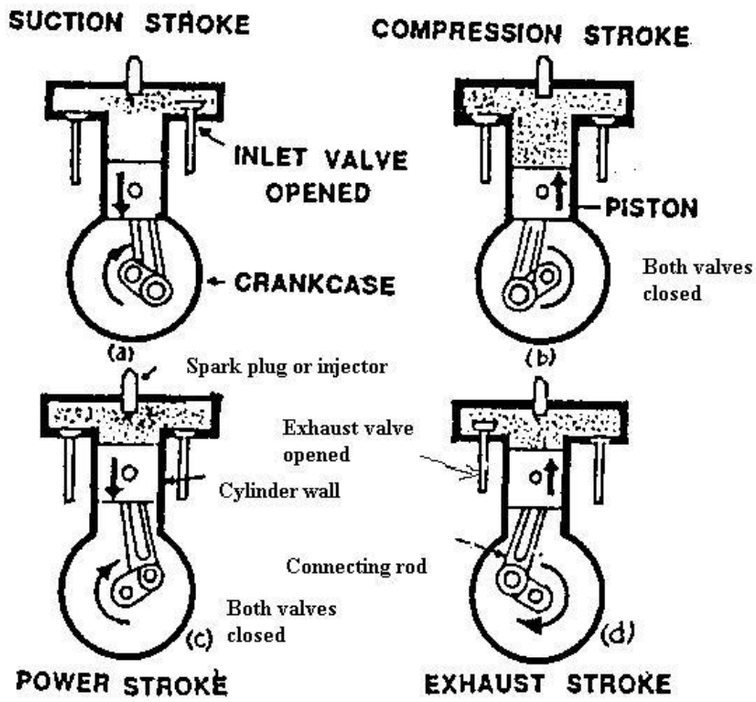

Fig. 3. Working of four stroke cycle engine

2.5.2 Two stroke cycle engine

In such engines, the whole sequence of events i.e. suction, compression, power and exhaust are completed in two strokes of the piston and in one complete revolution of the crankshaft (Fig.4). There is no valve in this type of engine. Gas movement takes place through holes called ports in the cylinder. The crankcase of the engine is gas tight in which the crankshaft rotates.

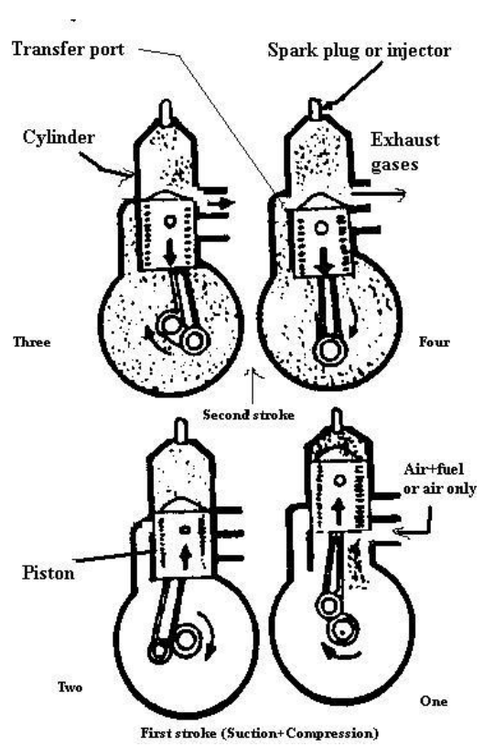

Fig. 4. Working of two stroke cycle engine

First stroke (suction + compression): When the piston moves up the cylinder, it covers two of the ports, the exhaust port and the transfer port, which are normally almost opposite to each other. This traps a charge of fresh mixture in the cylinder and further upward movement of the piston compresses this charge. Further movement of the piston also uncovers a third port in the cylinder suction port. More fresh mixture is drawn through this port into the crankcase. Just before the end of this stroke, the mixture in the cylinder is ignited as in the four stroke cycle.

Second stroke (Power + exhaust): The rise in pressure in the cylinder caused by the burning gases forces the piston to move down the cylinder. When the piston goes down, it covers and closes the suction port, trapping the mixture drawn into the crankcase during the previous stroke then compressing it. Further downward movements of the piston uncover first the exhaust port and then transfer port. This allows the burnt gases to flow out through exhaust port. Also the fresh mixture under pressure in the crankcase is transferred into the cylinder through transfer port during this stroke. Special shaped piston crown deflect the incoming mixture up around the cylinder so that it can help in driving out the exhaust gases.

When the piston is at the top of its stroke, it is said to be at the top dead centre (TDC). When the piston is at the bottom of its stroke, it is said to be at its bottom dead centre (BDC). In two stroke cycle engine, both the sides of the piston are effective, which is not the case in case of four stroke cycle engine.

Scavenging: The process of removal of burnt or exhaust gases from the engine cylinder is known as scavenging. Entire burnt gases do not go out in normal stroke, hence some type of blower or compressor is used to remove the exhaust gases in two stroke cycle engine.

2.6 Comparison between diesel and petrol (carburetor) engines

S.No.	**Diesel engine**	**Petrol engine**
1.	Diesel fuels are used.	Vapourizing fuels such as petrol, powerine or kerosene are used.
2.	Air alone is taken in during suction stroke.	Mixture of air and fuel is taken in.
3.	Fuel is injected into super heated air of the combustion space where burning takes place.	Air-fuel is compressed in the combustion chamber where it is ignited by an electric spark.
4.	Air-fuel ratio is not constant as the quantity of air drawn into the cylinder is always the same. To vary the load and speed the quantity of fuel injected is changed.	Air and fuel are almost always in the ratio of 15:1, but to vary the engine power, quantity of mixture is varied.
5.	Compression ratio of the engine varies from 14:1 to 20:1.	Compression ratio of the engine varies from 5:1 to 8:1.
6.	Specific fuel consumption is about 0.2 kg per BHP per hour.	Specific fuel consumption is about 0.29 kg per BHP per hour.
7.	4.5 litres of fuel is sufficient for nearly 20 hp hour.	4.5 litres of fuel will last about 12 hp hour.
8.	Diesel engine develops more torque, when it is heavily loaded.	This characteristic is not present in carburetor engines.
9.	Thermal efficiency varies between 32 and 38%.	Thermal efficiency varies between 25 and 32%.
10.	It runs at a lower temperature on part load.	Combustion gas temperature is slightly higher under part load.
11.	Engine weight per horse power is high.	Engine weight per horse power is comparatively low.
12.	Initial cost is high.	Initial cost is low.
13.	Operating cost is low.	Operating cost is comparatively high.

2.7 Comparison between two stroke and four stroke engines

S.No.	Particulars	Four stroke engine	Two stroke engine
1.	No. of power stroke	one power stroke for every two revolutions of the crankshaft	one power stroke for each revolutions of the crankshaft
2.	Power for the same cylinder volume	Small	Large (about 1.5 times of 4 stroke)
3.	Valve mechanism	Present	Ports instead of valves
4.	Construction and cost	Complicated and expensive	Simple, cheap
5.	Fuel consumption	Little	High (about 15% more)
6.	Removal of exhaust gases	Easy	Difficult
7.	Durability	Good	Poor
8.	Stability of operation	High	Low
9.	Lubrication	Equipped with an independent lubricating oil circuit	Using fuel, mixed with lubricating oil
10.	Oil consumption	Little	Much
11.	Carbon deposit inside cylinder	Not so much	Much because of mixed fuel
12.	Noise	Suction & exhaust is noiseless, but other working is noisy	Suction & exhaust is noiseless, but other working is noise less
13.	Air tight of crankcase	Un necessary	Must be sealed
14.	Cooling	Normal	Chances of overheating
15.	Self weight and size	Heavy & large	Light & small

Lecture No.3

Terminology related to engine power: IHP, BHP, FHP, DBHP, compression ratio, stroke bore ratio, piston displacement, and mechanical efficiency. Numerical problems on calculation of IHP, BHP, C.R., stroke bore ratio, piston displacement volume.

3.0 Engine Terminology

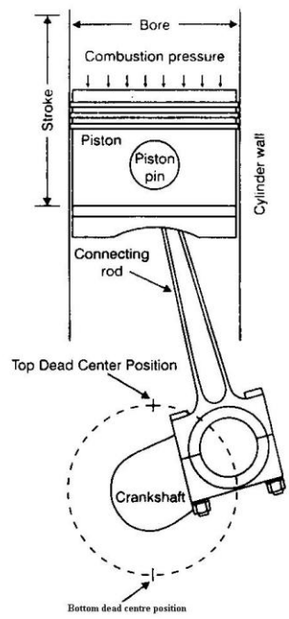

Fig.5. Diagram showing TDC and BDC positions

Bore : Bore is the diameter of the engine cylinder (Fig.5).

Stroke : It is the linear distance traveled by the piston from Top dead centre (TDC) to Bottom dead centre (BDC).

Stroke-bore ratio: The ratio of length of stroke (L) and diameter of bore (D) of the Cylinder is called Stroke-bore ratio (L/D). In general, this ratio varies between 1 to 1.45 and for tractor engines, this ratio is about 1.25.

Swept volume (Piston displacement): It is the volume (A x L) displaced by one stroke of the piston where **A** is the cross sectional area of piston and **L** is the length of stroke.

Compression ratio: It is the ratio of the volume of the charge at the beginning of the compression stroke to that at the end of compression stroke, i.e., ration of total cylinder volume to clearance volume. Compression ration of diesel engine varies from 14:1 to 20:1, carburetor engine varies from 4:1 to 8:1.

Power : It is the rate of doing work. Unit of power in SI units - Watt (Joule/sec).

Horse power: It is the rate of doing work. One HP is equivalent to 75 kg-m / sec.

Indicated Horse Power (IHP): it is the total horse power developed by all the cylinders and received by pistons, without friction and losses within the engine.

IHP = $\frac{PLAN}{4500} \times \frac{n}{2}$ (for four stroke engine)

IHP = $\frac{PLAN}{4500} \times n$ (for two stroke engine)

Where P - Mean effective pressure in Kg/cm^2

L- Length of the piston stroke in meters

A -Cross sectional area of piston in cm^2

N- rpm of the engine

n - Number of cylinders in the engine

Brake horse power (B.H.P): It is the horsepower delivered by the engine and is available at the end of the crankshaft and it is measured by suitable dynamometer.

Frictional horse power (F.H.P): It is the power required to run the engine at a given speed with out producing any useful work. It represents the friction and pumping losses of the engine.

F.H.P= I.H.P - B.H.P

I.H.P = B.H.P + F.H.P

Drawbar horse power (DBHP): It is the power of a tractor measured at the end of the drawbar. It is the power required to pull the loads.

Brake mean effective pressure (BMEP): It is the average pressure acting throughout the entire power strokes which are necessary to produce BHP of the engine.

BMEP = $\frac{BHP \times 75 \times 60}{L \times A \times N \times \frac{n}{2}}$ (for four stroke engine)

BMEP = $\frac{BHP \times 75 \times 60}{L \times A \times N \times n}$ (for two stroke engine)

Thermal efficiency: It is the ratio of the horse power output of the engine to the fuel horse power.

Mechanical efficiency: It is the ratio of the brake horse power to the indicated horse power.

Mechanical efficiency= $\frac{BHP}{IHP} \times 100$

Piston speed (Np) : It is the total length of travel of the piston in a cylinder in one minute. Piston speeds of the high speed tractor engine range between 300 to 500 m/m.

Displacement volume (Vd) : It is the total swept volume of all the pistons during power strokes occurring in a period of one minute.

$$Vd = ALn$$

A – piston area

L – piston stroke

N – number of power strokes per minute for all cylinders.

Example 1: Calculate the BHP of a 4 stroke, 4 cylinder I.C. Engine which has cylinder bore of 14 cm, stroke length of 16 cm, crankshaft speed of 1100 rpm, frictional horse power of 30, and mean effective pressure is 8 kg/cm^2.

Solution:

Data given: D = 14 cm ; L = 16 cm; N = 1100 rpm; FHP =30 and P=8 kg/cm^2

IHP = $\frac{PLAN}{4500} \times \frac{n}{2}$ (for four stroke engine)

IHP = $\frac{8 \times 0.16 \times \frac{\pi}{4} \times (4)^2 \times 1100}{4500} \times \frac{4}{2}$ = 96.4

I.H.P = B.H.P + F.H.P

$\therefore$ BHP = IHP – FHP = 96.4 – 30 = 66.4

Example 2: The horse power developed at the end of crankshaft of a 4 stroke, 4 cylinder I C engines was found to be 30 HP at a speed of 1500 RPM. The mean effective pressure is 6 kg/cm^2 .The stroke-bore ratio is 1.3. Find the length of stroke and diameter of bore if the mechanical efficiency is 80%.

Solution:

Data given: BHP =30; N = 1500; P=6 kg/cm^2; $\eta =$ 80%

Mechanical efficiency= $\frac{BHP}{IHP} \times 100$

IHP = $\frac{BHP}{\eta}$ = $\frac{30 \times 100}{80}$ = 37.5

IHP = $\frac{PLAN}{4500} \times \frac{n}{2}$ (for four stroke engine)

Stroke-bore ratio = $\frac{L}{D}$ = 1.3 $\Rightarrow$ L = 1.3 D

IHP = $\frac{6 \times 1.3D \times \frac{\pi}{4} \times D^2 \times 1500}{4500} \times \frac{4}{2}$

37.5 = 4.08 D^3 $\Rightarrow$ D = 2.1 cm

L = 1.3 × 2.1 = 2.7 cm

Example 3: A Four cylinder four stroke diesel engine has a cylinder diameter of 20 cm, stroke-bore ratio is 1.45, clearance volume 4508 cm^3, engine speed 250 rpm, mean effective pressure 6.8 kg/cm^2 and mechanical efficiency is 75%. Calculate (i) IHP, (II) BHP (iii) Compression ratio and (iv) Swept volume.

Solution:

Data given: D = 20 cm; N =250; P = 6.8 kg/cm^2; $\eta =$ 75%

clearance volume = 4508 cm^2

Stroke-bore ratio = $\frac{L}{D} = 1.45$

Where D= 20 cm

$\therefore$ L = 1.45× 20 = 29 cm

(i) IHP = $\frac{PLAN}{4500} \times \frac{n}{2}$ (for four stroke engine)

IHP = $\frac{6.8 \times 0.29 \times \frac{\pi}{4} \times 20^2 \times 250}{4500} \times \frac{4}{2}$ = 68.9

(ii) Mechanical efficiency= $\frac{BHP}{IHP} \times 100$

BHP = $\frac{IHP}{100} \times \eta$ = $\frac{68.9 \times 75}{100}$ = 51.7

(iii) and (iv) Compression ratio: $\frac{\text{Swept volume + Clearence volume}}{\text{Clearence volume}}$

Swept volume = A x L

$$= \frac{\pi}{4} \times (20)^2 \times 29 = 9114.3 \text{ cm}^3$$

Compression ratio = $\frac{9114.3 + 4508}{4508}$ = 3.02

Example 4: Calculate (i) IHP (ii) BHP (iii) Stroke bore ratio (iv) Compression ratio (v) Swept volume of a four stroke four cylinder I.C. engine with the following data:

Cylinder size : 12.5 x 15 cm

Fly wheel speed : 1200 rpm

Mean effective pressure : 7 kg/cm^2

Mechanical efficiency : 70%

Clearance volume : 150 CC

Solution

Data given: L = 15 cm; D = 12.5 cm; N = 1200; P = 7 kg/cm^2; $\eta =$ 70%

(i) IHP = $\frac{PLAN}{4500} \times \frac{n}{2}$ (for four stroke engine)

IHP = $\frac{7.0 \times 0.15 \times \frac{\pi}{4} \times (2.5)^2 \times 1200}{4500} \times \frac{4}{2}$ = 68.7

(ii) Mechanical efficiency= $\frac{BHP}{IHP} \times 100$

BHP = $\frac{IHP}{100} \times \eta$ = $\frac{68.7 \times 70}{100}$ = 48.1

(iii) Stroke-bore ratio = $\frac{L}{D} = \frac{15}{12.5}$ = 1.2

(iv) and (v) Compression ratio: $\frac{\text{Swept volume + Clearence volume}}{\text{Clearence volume}}$

Swept volume = A x L

$$= \frac{\pi}{4} \times (12.5)^2 \times 15 = 1841.5 \text{ cm}^3$$

Compression ratio = $\frac{1841.5 + 150}{150}$ = 13.3

Lecture No.4

Fuel supply and cooling system of I.C. engine – types, components and their functions, working principle of forced circulation cooling system.

4.0 Fuel and fuel supply system

Fuel is a substance consumed by the engine to produce energy. The common fuels for IC engines are: (i) petrol, (ii) power kerosene, (iii) high speed diesel oil (H.S.D oil) and (iv) light diesel oil (L.D.O)

4.1 Quality of fuel

The quality of fuel mainly depends upon the following properties: (i) volatility, (ii) calorific value and (iii) ignition quality of fuel. A good fuel contains a combination of qualities such as good volatility, high antiknock value, chemical purity, and freedom from gum.

4.1.1 Volatility

It is the vapourizing ability of a fuel at a given temperature. It indicates the operating characteristics of the fuel inside the engine. It is measured by means of distillation tests on the fuel.

In IC engine, all the liquid fuel must be converted into vapour fuel before burning. Petrol which shows lower initial and final boiling points, compared to other fuels, vapourizes at a lower temperature. HSD oil is most difficult to vapourize. Its vapourizing temperature is higher than that of the petrol, hence the petrol vapourizes quicker than diesel oil in the engine cylinder. This helps in easy starting of petrol engines. The oil that vapourizes quickly can be distributed well in different cylinders of the engine, hence distribution of fuel in different cylinders is better in petrol engine than that of diesel engine.

4.1.2 Calorific value

The heat liberated by combustion of a fuel is known as calorific value or heat value of the fuel. It is expressed in kcal/kg of the fuel. Calorific values (kcal/kg) of different fuels are as follows:

1) Petrol – 11,100 (highest)
2) Power kerosene – **10,850**
3) High speed diesel oil (HSD oil)- 10,550
4) Light diesel oil (LDO oil) – 10,300

4.1.3 Ignition quality

It refers to ease of burning the oil in the combustion chamber. Octane number and cetane number are the measures of ignition quality of the fuel. Octane number is standard yardstick for measuring knock characteristics of fuels.

Cetane number is the relative measure of the interval between the beginning of injection and auto-ignition of the fuel. The higher the cetane number, the shorter the delay interval and the greater its combustibility. Fuels with low cetane Numbers will result in difficult starting, noise and exhaust smoke.

4.2 Detonation

Detonation or engine knocking refers to violent noises heard in an engine during the process of combustion after the piston has passed over the TDC. It is an undesirable combustion and results in sudden rise in pressure, a loss of power and overheating of the engine. This may cause damage to pistons, valves, gasket and other parts.

Detonation is caused by improper combustion chamber, high compression pressure, early ignition timing, improper fuel and inadequate cooling arrangement.

4.3 Pre-ignition

Burning of air-fuel mixture in the combustion chamber before the piston has reached the TDC is called pre-ignition. This may be due to excessive heat in the cylinder.

4.4 Fuel supply system in compression ignition engine or diesel engine

The main components of the fuel supply system in diesel engine are: (i) fuel tank, (ii) primary fuel filter, (iii) fuel transfer pump or fuel lift pump, (iv) secondary fuel filter, (v) fuel injection pump, (vi) high pressure pipes, (vii) fuel injection nozzles or fuel injectors and over flow pipe (Fig.6).

During engine operation, the fuel is supplied by gravity from fuel tank to the primary filter where coarse impurities are removed. From the primary filter, the fuel is drawn by fuel transfer pump. This pump is also known as fuel lift pump, is activated by a cam on the engine camshaft. The fuel lift pump forces fuel under low pressure (2.5 kg/cm^2) through the secondary fuel

filter to the injection pump, which is generally driven by the camshaft. The purpose of fuel injection pump is to deliver a metered quantity of fuel at a predetermined time under pressure (120 to 175 kg/cm^2 or more) through the high pressure tubes to the injection nozzles or injectors. The fuel that leaks out from the injection nozzles passes out through leakage pipe and returns to the fuel tank through the over flow pipe. In some tractors and industrial engines, the fuel supply is by gravity and hence no fuel lift pump is provided.

Two conditions are essential for efficient operation of the system:

(a) The fuel should be clean, free from water, suspended dirt, sand or other foreign matter.

(b) The fuel injection pump should create proper pressure, so that diesel fuel may be perfectly atomized by injectors at proper time and quantity.

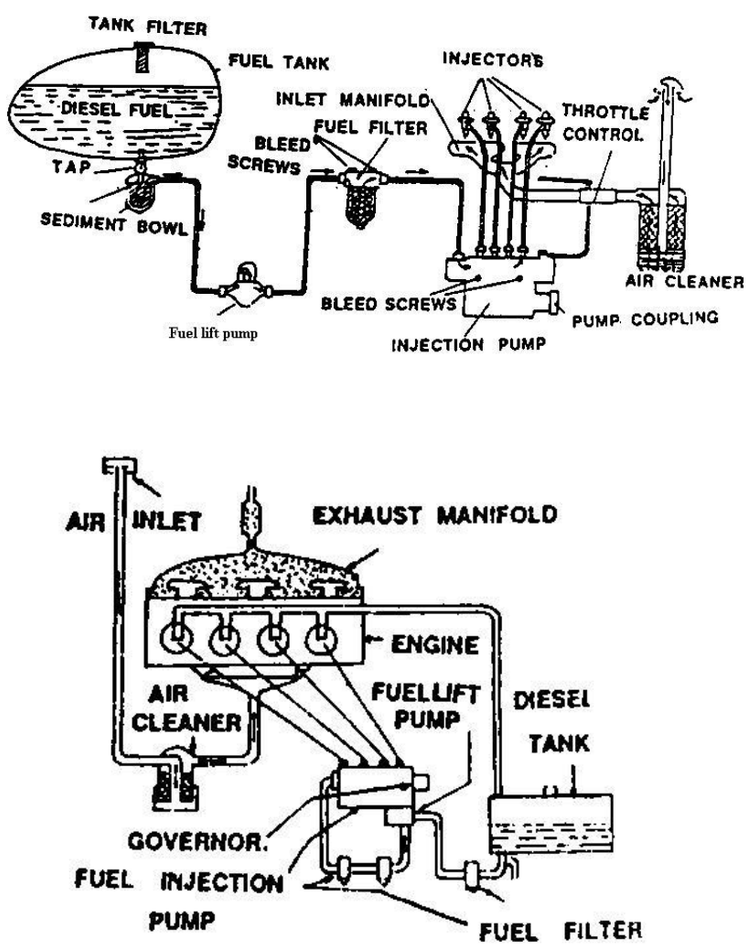

Fig. 6. Fuel supply system in diesel engine

4.4.1 Components of fuel supply system

Fuel tank

It is a storage tank of suitable size and shape, usually made of mild steel sheet. Atmospheric pressure is maintained in the tank with the help of a pin

hole on the cap. Usually a wire gauge strainer is provided under the cap to prevent foreign particles. Usually a drain plug is provided at the bottom for flow of fuel.

Fuel lift pump

It transfers adequate amount of fuel from the fuel tank to the inlet gallery of the injection pump through fuel filter. The fuel pressure at the fuel lift pump in the range of 1.5 to 2.5 kg/cm^2. It is mounted on the body of fuel injection pump. Fuel lift pump may be (i) plunger type, (ii) diaphragm type.

Fuel filter

It is a device to remove dirt and solid particles from the fuel to ensure trouble free fuel supply (Fig.7). Solid particles and dust in diesel fuel are very harmful for giving a fine degree of filtration. Fuel injection equipment in diesel engines is extremely sensitive to dirt and solid particles present in fuel.

It consists of a hollow cylindrical element contained in a shell, an annular space being left between the shell and the element. The filtering element consists of metal gauge in conjunction with various media such as packed fibers, woven cloth, felt, paper etc. These filters are replaced at certain intervals, specified by the manufacturer.

Usually there are two filters in diesel engine: (1) Primary filter and (2) secondary filter. The primary filter removes water and coarse particle of dirt from the fuel. The secondary filter removes fine sediments from the fuel. Usually the primary filter is placed between the tank and the fuel lift pump.

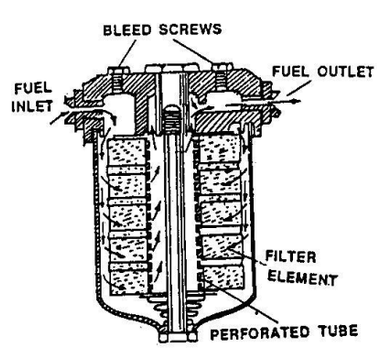

Fig. 7. Fuel filter

Fuel injection pump

It is a high pressure pump, which delivers metered quantity of fuel to each cylinder at appropriate time under pressure according to the firing order of the

engine. It is used to create pressure varying from 120 to 175 kg/cm^2. Fuel injection pumps are mostly constant stroke type and in most of the tractors there is an individual pump for each cylinder.

The pumps used in tractor are of two types: (i) multi element pump and (ii) (ii) Distributor (Rotor) type pump.

Multi element injection pump

The plunger (Fig.8) reciprocates in close fitting barrel with the help of tappet and spring. The upper part of the plunger has got helix, which makes it possible to vary the delivery of the fuel. An annular groove in the central part of the plunger facilitates the distribution of fuel over the barrel. As the plunger moves down, the fuel enters the barrel from inlet side. As plunger moves up, it closes the inlet part of the barrel and pressurizes the fuel in the barrel. This causes delivery valve to lift off its seat and allows the fuel to enter into the injection line, leading to the fuel injector. As soon as the edge of the helix uncovers the split part of the barrel, the fuel pressure quickly drops. The cam shaft of the fuel injection pump is driven directly from the engine timing gear.

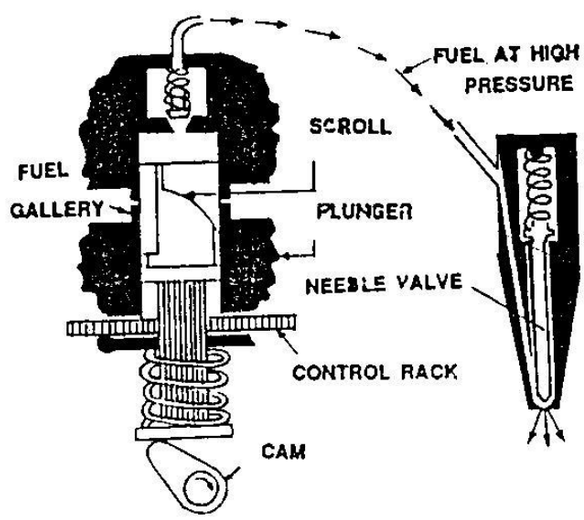

Fig. 8. Multi element fuel injection pump

Distributor (rotor) type pump:

In this type of pump, one plunger and one barrel assembly deliver fuel not to one cylinder but to several cylinders. The plunger not only reciprocates, but rotates in a close fitting barrel. This helps in distributing fuel to a number of cylinders at a time.

Fuel injector

It is the component which delivers finely atomized fuel under high pressure to the combustion chamber of the engine. Modern tractor engines use fuel injectors which have multiple holes.

Air cleaner

It is a device, which filters and removes dust, moisture and other foreign matter from the air before if reaches the engine cylinder. Air cleaner is usually of two types: (1) Dry type air cleaner and (2) Oil bath type air cleaner.

Dry type air cleaner

The filtering element in this case is a type of felt. The felt has got larger surface area, reduces the air speed while passing through and consequently particle or dirt in the air is deposited on or stopped by its surface.

Oil bath type air cleaner

In this type of air cleaner, the incoming air impinges upon the surface of the oil, kept in a container in the lower part of the casing. The foreign particles of the air are trapped in the oil and then the air passes through a wire element before reaching the inlet manifold of the engine. The wire element also arrests the remaining dirt particles of the air.

Governor

Governor is a mechanical device designed to control the speed of an engine within specified limit used on tractor or stationary engine for: (i) maintaining a nearly constant speed of engine under different load conditions (ii) protecting the engine and the attached equipments against high speeds, when the load is reduced or removed. Tractor engines are always fitted with governor. There is an important difference in principle between the controls of a tractor engine and that of a motor car. In case of motor car, the fuel supply is under direct control of the accelerator pedal, but in tractor engine, the fuel supply is controlled by the governor. The operator changes the engine speed by moving the governor control lever.

A governor is essential on a tractor engine for the reason that load on the tractor engine is subjected to rapid variation in the field and the operator can not control the rapid change of the engine speed without any automatic device. For example, if the load on the tractor is reduced, the engine would tend to race suddenly. If the load is increased, the engine would tend to slow down abruptly. Under these circumstances, it becomes difficult for the operator to regulate always the throttle lever to meet the temporary changes in the engine load. A governor automatically regulates the engine speed on varying load condition and thus the operator is relieved of the duty of constant regulating the throttle lever to suit different load conditions.

Principle of governor

Engine Governor is used for automatically controlling the speed of an engine regulating the intake of fuel or injection fuel, so that engine speed is maintained at the desired level under all conditions of loading.

Governor used on tractor engine is called *variable* speed governor and the one used on stationary engine is called constant speed governor. Governing system is classified as: (i) hit and miss system, (ii) throttle system

4.5 Cooling System

Fuel is burnt inside the cylinder of an internal combustion engine to produce power. The temperature produced on the power stroke of an engine can be as high as 1600ºC and this is greater than melting point of engine parts.

The cylinder and cylinder head are usually made of cast iron and pistons in most cases are made of aluminum alloy. It is estimated that about 40 % of total heat produced is passed to the atmosphere via the exhaust, 30 % is removed by cooling system and only about 30% is used to produce useful power.

4.5.1 Bad effect of high temperature in the engine

(i) Cylinder and piston may expand to such an extent that the piston would seize in the cylinder and stop the engine.

(ii) Lubricating quality of the oil inside the cylinder would be destroyed due to high temperature and there may not be sucking of air in the cylinder.

(iii) Pre-ignition of fuel mixture would take place and would cause engine knocking as well as loss of power.

For satisfactory performance of the engine, neither overheating nor over-cooling is desirable. Experiments have shown that best operating temperature of I.C engine lies between 140ºF to 200 ºF, depending upon types of engines and load conditions.

4.5.2 Purpose of cooling

(i) To maintain optimum temperature of engine for efficient operation under all conditions.

(ii) To dissipate surplus heat for protection of engine components like cylinder, cylinder head, piston, piston rings and valves.

(iii) To maintain the lubricating property of the oil inside the engine cylinder for normal functioning of the engine.

There are two different methods of cooling: (i) air cooling and (ii) water cooling.

4.5.3 Air cooling

Air cooled engines are those engines, in which heat is conducted from the working components of the engine to the atmosphere directly. In such engines, cylinders are generally not grouped in a block.

Principle of air cooling

The cylinder of an air cooled engine has fins to increase the area of contact of air for speedy cooling. The cylinder is normally enclosed in a sheet metal casing called *Cowling*. The flywheel has blades projecting from its face, so that it acts like a fan drawing air through a hole in the cowling and directing it around the finned cylinder. For maintenance of air cooling system, passage of air is kept clean by removing grasses etc. This is done by removing the cowling and cleaning out the dirt etc. by a stiff brush or compressed air. When separate fan is provided, the belt tension is to be checked and adjusted if necessary.

Advantages of air cooling

It is simpler in design and construction. Water jackets, radiators, water pump, thermostat, pipes, hoses etc. are not needed. It is more compact. It is comparatively lighter in weight.

Disadvantages

There is uneven cooling of the engine parts. Engine temperature is generally high during working period.

4.5.4 Water cooling

Engines, using water as cooling medium is called “water cooled engines”. The liquid is circulated round the cylinders to absorb heat from the cylinder walls. In general, water is used as cooling liquid. The heated water is conducted through a radiator which helps in cooling the water.

There are three common methods of water cooling: (i) Open jacket or hopper method, (ii) Thermo siphon method, and (iii) Forced circulation method.

Forced circulation method

In this method, a water pump is used to force water from the radiator to the water jacket of the engine. After circulating the entire run of water jacket, hot water goes to the radiator, where it passes through tubes surrounded by air. A fan is driven with the help of a V-belt to suck air through tubes of the radiator unit, cooling radiator water. To maintain the correct engine temperature, a thermostat valve is placed at the outer end of cylinder head. Cooling liquid is by-passed through the water jacket of the engine until engine attains the desired temperature. Then thermostat valve opens and the by-pass is closed, allowing the water to go to the radiator. The system consists of water pump, radiator, fan, fan-belt, water jacket, thermostat valve, temperature gauge and hose pipe (Fig.9).

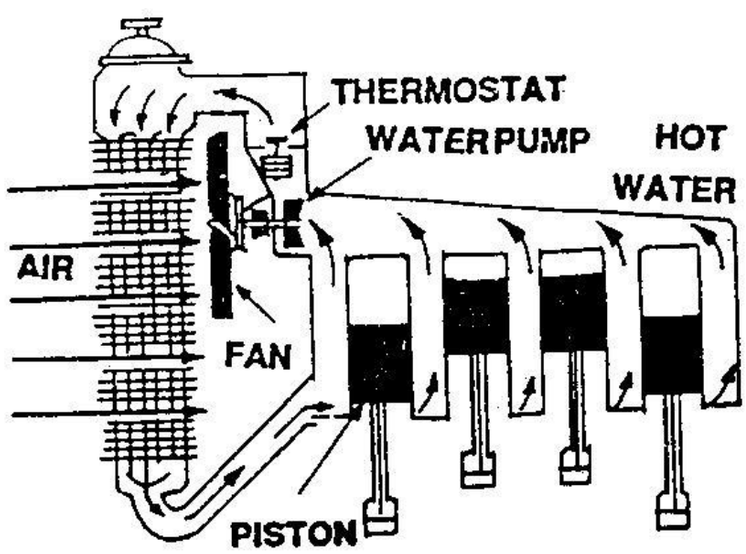

Fig. 9. Working of forced circulation cooling system

Water pump

It is a centrifugal type pump. It has a casing and an impeller, mounted on a shaft. The casing is usually made of cast iron. Pump shaft is made of some non-corrosive material. At the end of the shaft, a small pulley is fitted which is driven by a V-belt. Water pump is mounted at the front end of the cylinder block between the block and the radiator. When the impeller rotates, the water between the impeller blades is thrown outward by centrifugal force and thus water goes to the cylinder under pressure. The pump outlet is connected by a hose pipe to the bottom of the radiator. The impeller shaft is supported on one or more bearings. There is a seal which prevents leakage of water.

Radiator

Radiator is a device for cooling the circulating water in the engine. It holds a large volume of water in close contact with a large volume of air so that heat is transferred from the water to the air easily.

Hot water flows into thee radiator at the top and cold water flows out from the bottom. Tubes or passages carry the water from the top of the radiator to the bottom, passing it over a large metal surface. Air flows between the tubes or through the cells at right angles to the downward flowing water. This helps in transferring the heat from the water to the atmosphere. On the basis of fabrication, the radiator is of two types: tubular type and cellular type.

Tubular type radiator: It has round or flat water tubes, leading from the top to the bottom of the radiator. They may be soldered, brazed or welded in place or fastened by means of a stuffing box at each end. Fins or folded strips of light sheet metal, placed between the tubes, increase the radiating surface and improve the heat transfer.

Cellular type radiator: It has a core made of short air tubes which are laid horizontally and soldered together at the ends with space between them to allow water to flow. It is also called *Honey comb type* radiator.

Thermostat valve

It is a control valve, used in the cooling system to control the flow of water when activated by a temperature signal.

It is a special type of valve, which closes the inlet passage of the water connected to the radiator. The thermostat is placed in the water passage

between the cylinder head and the top of radiator. Its purpose is to close this passage when the engine is cold, so that water circulation is restricted, causing the engine to reach operating temperature more quickly. Thermostats are designed to start opening at 70ºC to 75 ºC and then fully open at 82 ºC for petrol engine and 88-90 ºC for diesel engine.

The thermostat valves are of two types:

(a) Bellows and

(b) Bimetallic.

(a) Bellows type: Bellows type thermostats have got bellows, which contain a liquid like alcohol or ether. The liquid expands with the increase of temperature and raises the valve off its seat. This permits the water to circulate between the engine and the radiator.

(b) Bimetallic type: It consists of a bimetallic strip. Unequal expansion of two metallic strips causes the valve to open and allows the water to flow to the radiator.

Water jackets: Water jackets are cored out around the engine cylinder so that water can circulate freely around the cylinder as well as around the valve opening.

Fan: The fan is usually mounted on the water pump shaft. It is driven by the same belt that drives the pump and the dynamo. The purpose of the fan is to provide strong draft of air through the radiator to improve engine cooling.

Lecture No.5

Ignition and power transmission system of I.C engine – types, components and their functions, working principle of battery ignition system.

5.0 Ignition system

Fuel mixture of I. C engine must be ignited in the engine cylinder at proper time for useful work. Arrangement of different components for providing such ignition at proper time in the engine cylinder is called ignition system.

There are four different systems of igniting fuel: (i) i**gnition by electric spark i.e., spark ignition, (ii) ignition by heat of compression i.e. compression ignition, (iii) i**gnition by hot tube or hot bulb and (iv) ignition by open flame. Only the first two are important methods for modern engines.

5.1 Spark ignition

The purpose of spark ignition is to deliver a perfectly timed surge of electricity across an open spark plug gap in each cylinder at the exact moment, so that the charge may start burning with maximum efficiency. There are two methods in spark ignition: (a) Battery ignition and (b) Magneto ignition.

5.1.1 Battery ignition

Principle

Battery ignition system includes two circuits: low voltage (primary circuit) and high voltage (secondary circuit). The low-voltage circuit consists of : (i) battery (ii) ignition switch (iii) a series register (IV) primary winding and (v) contact breaker. All are connected in series. The high voltage circuit consists of: (i) secondary winding (ii) distributor rotor (iii) high voltage wiring and (iv) spark plugs. They are also connected in series. Battery ignition system on a modern tractor includes a storage battery, ignition switch, high tension coil, distributor, contact breaker mechanism, condenser, spark plugs, generator and cutout.

Working

Electric current is supplied by the battery to the ignition circuit. When the distributor breaker points are closed, low voltage current flows through the primary winding of the ignition coil to the distributor terminal and through

the breaker points to the ground. During this time, a strong magnetic field built up in the coil. When the piston is at the end of compression stroke, the distributor points are opened, the magnetic field in the coil starts collapsing. Thus, a current is induced in the primary winding of the coil, which tends to prevent break down of the magnetic field. A very high voltage is produced in the secondary winding due to sudden collapse of the magnetic field. This sudden collapse of the magnetic field in the coil, produces a very high voltage across the secondary winding terminals to a value of 20 to 24 thousand volts.

The high-voltage surge is delivered to the center terminal of the distributor cap, where it is picked up by the rotor and directed to the proper spark plug. The high voltage is capable of jumping the spark across the gap of the spark plug and ignites the compressed air-fuel mixture (Fig.10).

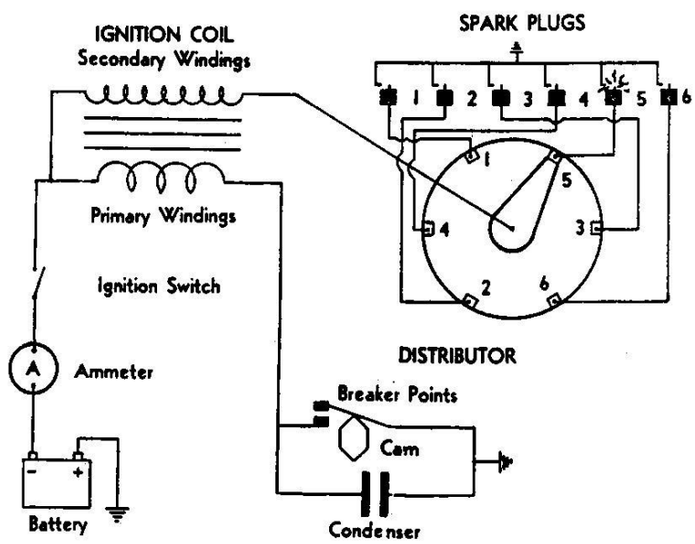

Fig. 10. Circuit diagram for battery ignition system

This system of a number of components such as: (i) Spark plug (ii) Distributor (iii)Ignition coil(iv)Condenser (v) Ignition switch (vi) Dynamo and (vii) Storage battery.

(1) Spark plug

Spark plug ignites the air –fuel mixture in combustion chamber. It is a device for the high voltage current to jump and ignite the charge. Each spark plug consists of a threaded outer shell with an outside electrode, insulator and a copper gasket. The width of the gap between the points of the two electrodes of a spark plug should conform to the manufacturers. If the clearance is too wide, it does not give satisfactory operation. Usually the spark plug gap settings are kept between 0.5 and 0.85 mm. The higher the compression pressure, the more difficult it is for the current to jump the gap. In this case,

the gap setting should be closer. In adjusting the spark plug gap, it is always the outer electrode that is bent. The central electrode is never bent, otherwise the porcelain insulator may break. Sometimes, one or more cylinders of a tractor engine do not fire, or fire irregularly. This is generally due to dirty, cracked or ground plugs. A rich mixture causes carbon deposits on the plugs. Under all circumstances, the plugs should be taken out and cleaned properly.

The heat range of the spark plug is determined by the distance the heat must travel from the lower most tip of the central electrode to the engine block (via) the spark plug gasket. The farther the heat travels, the hotter the plug will run. Based on this, the spark plugs classified into two types: (a) cold plug and (b) hot plug. **Cold plug** has a short insulator, extending into the cylinder. It conducts the heat away from the point rapidly, allowing it to be cooled by the cylinder jacket. The short path dissipates heat quickly, so it is named as cold plug. Cold plugs are used on petrol engines. **Hot plug** has comparatively longer insulator, so the heat has to pass through a longer path to reach the cooling water and hence the heat is not dissipated quickly. Hot plugs are used for powerine engines.

Distributor

This is a rotary switch driven by the engine through gears at half the engine speed. This device used for interrupting the low voltage primary current and distributing the resulting high voltage current to the engine cylinder in proper sequence and in proper time.

The main functions of distributor are:

(i) it closes and opens the primary circuit.

(ii) it distributes the resulting high voltage current to the engine cylinder in proper sequence and in proper time.

Distributor cap is made of Bakelite or similar non-conducting material. High-tension cables connect the terminals in the distributor cap to the spark plug.

Ignition coil

It serves the purpose of a small transformer, which sets up low voltage (may be 6 volts) to very high voltage (may be 20,000 volts). It is necessary to jump the gap of the spark plug. The ignition coil is sealed to prevent entry of moisture which would cause short circuiting within the coil.

Condenser

A condenser consists of a pair of flat metal plates, separated by air. The most common type of condenser is of metal foil strips, separated by wax impregnated paper. The condenser in the distributor is connected across the contact breaker points. It is used to produce a quick collapse of the magnetic field in the coil to obtain extremely high voltage. In doing so, the condenser prevents sparking across the contact breaker points, thus preventing the points from burning.

Ignition switch

A switch is provided in the primary circuit for starting and stopping the engine is called ignition switch. It may be push pull type or key type.

Dynamo

The purpose of the dynamo is to keep the battery charged and to supply current for ignition, light and other electrical accessories. The dynamo supplies direct current to the battery and keeps it fully charged.

Storage battery

Storage battery is a device for converting chemical energy into electrical energy. There are several types of battery, but lead-acid battery is most common for IC engines, used for tractors and automobiles. A battery consists of plates, separators, electrolyte, container and terminal wire.

Plates are of two types: (i) positive and (ii) negative. All positive and negative plates are rectangular in shape. All positive plates are connected together to form a positive group and negative plates are connected together to form a negative group. Positive plates are made of lead and antimony and negative plates are made of spongy lead. Separators are used to act as insulators between the plates to prevent them from touching each other to avoid short-circuiting. Usually separators are made of wood, rubber and cellulose fibre. Electrolyte is the chemical solution used in battery for chemical reaction. It consists of 35% sulphuric acid and 65% distilled water by weight with a specific gravity of 1.280 in fully charged condition. The specific gravity is measured by hydrometer. The electrolyte level should be 12 to 14 mm above the top edge of the plates. Specific gravity of the electrolyte should be checked at suitable interval. If the specific gravity is

below 1.225, it should be charged. Container is usually made of hard rubber. The tops are covered with rubber material and sealed with a water proof compound**.** Terminal wires are two in number, one connects the positive terminal and other connects the negative terminal with the electric circuit.

5.2 Power transmission system

Transmission is a speed reducing mechanism, equipped with several gears (Fig.11). It may be called a sequence of gears and shafts, through which the engine power is transmitted to the tractor wheels. The system consists of various devices that cause forward and backward movement of tractor to suit different field condition. The complete path of power from the engine to the wheels is called *power train.*

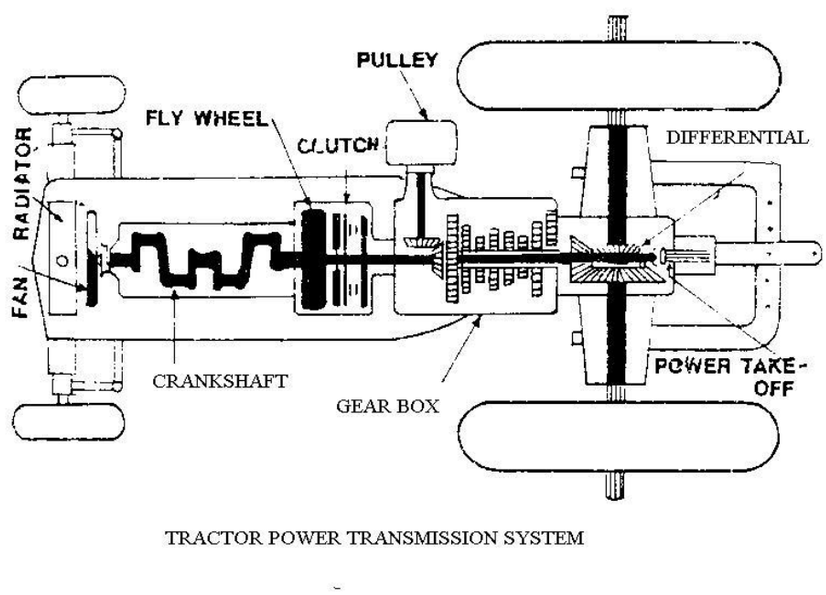

Fig. 11. Power transmission system of tractor

5.2.1 Function of power transmission system

(i) to transmit power from the engine to the rear wheels of the tractor.

(ii) to make reduced speed available, to rear wheels of the tractor.

(iii) to alter the ratio of wheel speed and engine speed in order to suit the field conditions.

(iv) to transmit power through right angle drive, because the crankshaft and rear axle are normally at right angles to each other.

The power transmission system consists of: (a) clutch, (b) transmission gears (c) differential, (d) final drive, (e) rear axle, (f) rear wheels. Combination of all these components is responsible for transmission of power.

5.2.2 Clutch

Clutch is a device, used to connect and disconnect the tractor engine from the transmission gears and drive wheels. Clutch transmits power by means of friction between driving members and driven members.

Necessity of clutch in a tractor

Clutch in a tractor is essential for the following reasons:

(i) Engine needs cranking by any suitable device. For easy cranking, the engine is disconnected from the rest of the transmission unit by a suitable clutch. After starting the engine, the clutch is engaged to transmit power from the engine to the gear box.

(ii) In order to change the gears, the gear box must be kept free from the engine power, otherwise the gear teeth will be damaged and engagement of gear will not be perfect. This work is done by a clutch.

(iii) When the belt pulley of the tractor works in the field it needs to be stopped without stopping the engine. This is done by a clutch.

Essential features of a good clutch

(i) It should have good ability of taking load without dragging and chattering.

(ii) It should have higher capacity to transmit maximum power without slipping.

(iii) Friction surface should be highly resistant to heat effect.

(iv) The control by hand lever or pedal lever should be easy.

Types of clutch

Clutches are mainly of three types:

(1) Friction clutch (2) Dog clutch (3) Fluid coupling.

Friction clutch (Fig.12) is most popular in four wheel tractors. Fluid clutch is also used in some tractors these days. Dog clutch is mostly used in power tillers. Friction clutch may be subdivided into three classes: (a) Single plate clutch or single disc clutch (b) Multiple plate clutch or multiple disc clutch (c) Cone clutch.

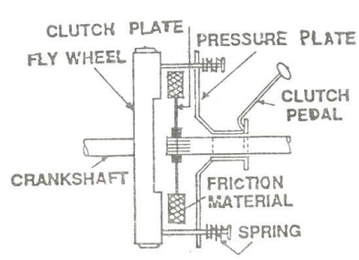

Fig. 12. Single plate clutch

5.2.3 Gears

Speed varies according to the field requirements and so a number of gear ratios are provided to suit the varying conditions. Gears are usually made of alloy steels. As the tractor has to transmit heavy torque all the time, best quality lubricants free from sediments, grit, alkali and moisture, is used for lubrication purpose. SAE 90 oil is generally recommended for gear box.

5.2.4 Differential

Differential unit (Fig.13) is a special arrangement of gears to permit one of the rear wheels of the tractor to rotate slower or faster than other. While turning the tractor on a curve path, the inner wheel has to travel lesser distance than the outer wheel. The inner wheel requires lesser power than the outer wheel, this condition is fulfilled by differential unit, which permits one of the rear wheels of the tractor to move faster than the other at the turning point.

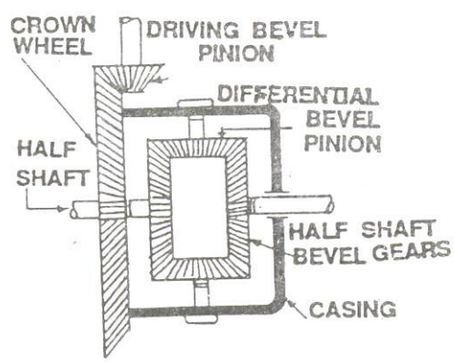

Differential unit

Fig.13. Tractor differential unit

5.2.5 Differential lock

Differential lock is a device to join both half axles of the tractor so that even if one wheel is under less resistance, the tractor comes out from the mud etc as both wheels move with the same speed and apply equal traction.

5.2.6 Final drive

Final drive is a rear reduction unit in the *power trains* between the *differential* and *drive wheels.*

Lecture No.6

Lubrication system of I.C. engine – types, purpose, components and their functions, working principle of forced feed system. Tractors classification, types, points to be considered in selection of tractors, estimating the cost of operation of tractor power.

6.0 Lubrication System

IC Engine is made of many moving parts. Due to continuous movement of two metallic surfaces over each other, there is wearing of moving parts, generation of heat and loss of power in the engine. Lubrication of moving parts is essential to prevent all these harmful effects.

6.1 Purpose of lubrication

Lubrication of the moving parts of an IC Engine performs the following functions:

(i) Reduces the wear and prevents seizure of rubbing surfaces (Reduce wear)

(ii) Reduces the power needed to overcome the frictional resistance (Reduce frictional effect).

(iii) Removes the heat from the piston and other parts (Cooling effect)

(iv) Serves as a seat between piston rings and cylinder (Sealing effect)

(v) Removes the foreign material between the engine working parts (Cleaning effect)

Reducing frictional effect

The primary purpose of the lubrication is to reduce friction and wear between two rubbing surfaces. The continuous friction produces heat which causes wearing of parts and loss of power. This can be avoided by proper lubrication, which forms an oil film between two moving surfaces.

Cooling effect

The heat generated by piston, cylinder and bearings is removed by lubrication to a great extent. Lubrication creates cooling effect on the engine parts.

Sealing effect

The lubricant enters into the gap between the cylinder liner, piston and piston rings. Thus, it prevents leakage of gases from the engine cylinder.

Cleaning effect

Lubrication keeps the engine clean by removing dirt or carbon from inside of the engine along with the oil.

6.2 Types of Lubricants

Lubricants are obtained from animal fat, vegetables and minerals. Lubricants made of animal fat, does not stand much heat. It becomes waxy and gummy which is not very suitable for machines. **Vegetable lubricants** are obtained from seeds, fruits and plants. Cotton seed oil, Olive oil, linseed oil and Castor oil are used as lubricant in small simple machines. **Mineral lubricants** are most popular for engines and machines. It is obtained from crude petroleum found in nature. Petroleum lubricants are less expensive and suitable for IC Engines.

6.3 Engine lubricating system

The lubricating system of an engine is an arrangement of mechanism and **devices** which maintains supply of lubricating oil to the rubbing surface of an engine at correct pressure and temperature. The parts which require lubrication are: (i) cylinder walls and piston, (ii) piston pin (iii) crankshaft and connecting rod bearings (iv) cam shaft bearings (v) valves and valve operating mechanism (vi) cooling fan (vii) water pump and (viii) ignition mechanism. There are three common systems of lubrication used on stationery engines, tractor engines and automobiles: (i) splash system, (ii) forced feed system, and (iii) combination of splash and forced feed system.

6.3.1 Forced feed system

In this system, the oil is pumped directly to all the moving parts (i.e., crankshaft, connecting rod, piston pin, timing gears and cam shaft) of the engine through suitable paths of oil (Fig.14). Lubricating oil pump is a positive displacement pump, usually **gear or vane type**, which is driven by the camshaft, forces oil from the crankcase to all crankshaft, and connecting rod bearings, cam shaft bearings and timing gears. Usually the oil first enters the main gallery, which may be a pipe or a channel in the crankcase casting. From this pipe, it passes to each of the main bearings through holes. From main bearings, it passes to big end bearings of connecting rod through drilled holes in the crankshaft. From there, it passes to lubricate the walls, pistons and rings. There is separate oil gallery to lubricate timing gears. The oil also passes to valve stem and rocker arm shaft under pressure through an oil gallery. The excess oil comes back from the cylinder head to the crankcase. The pump discharges oil into oil pipes, oil galleries or ducts, leading to

different parts of the engine. The system is commonly used on high speed multi-cylinder engine in tractors, trucks and automobiles.

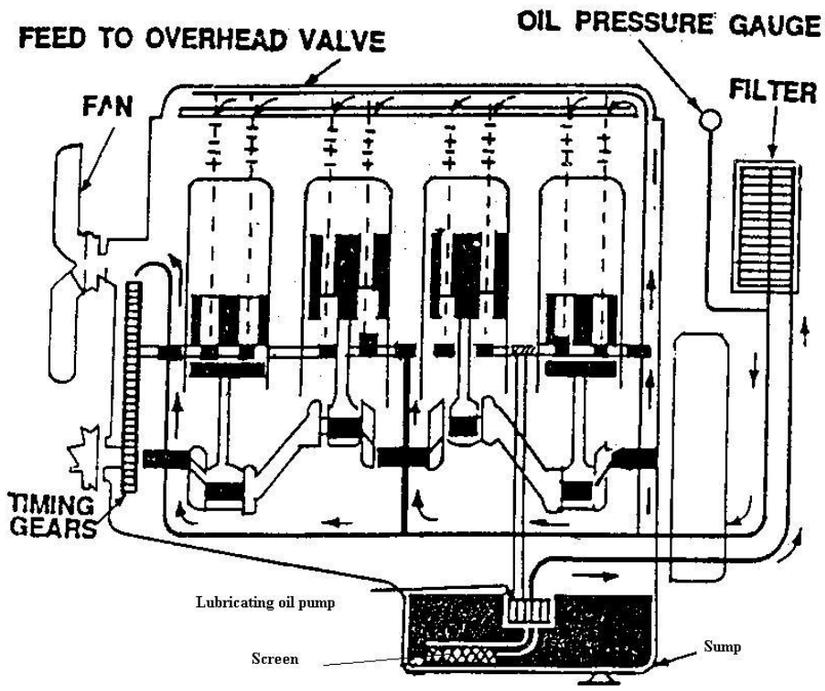

Fig. 14. Working of forced circulation lubrication system

Components

Oil Pump

It is usually a gear type pump, used to force oil into the oil pipe. The pump is driven by the camshaft of the engine. The lower end of the pump extends down into the crankcase, which is covered with a screen to check foreign particles. A portion of the oil is forced to the oil filter and the remaining oil goes to lubricate various parts of the engine. An oil pressure gauge fitted in the line, indicates the oil pressure in the lubricating system. About 3 kg/cm^2 pressure is developed in the lubrication system of a tractor engine.

Oil filters

Lubricating oil in an engine becomes contaminated with various materials such as dirt, metal particles and carbon. An oil filter removes all the dirty elements of the oil in an effective way. It is a type of strainer using cloth, paper, felt, wire screen or similar elements. Some oil filters can be cleaned by washing, but in general old filters are replaced by new filters at specified interval of time. It is normally changed after about 120 hours of engine operation. Oil filters are of two types: (i) full-flow filter, and (ii) by-pass filter

Full flow filter

In this filter, the entire quantity of oil is forced to circulate through it before it enters the engine. A spring loaded valve is usually fitted in the filter as a protection device against oil starvation in case of filter getting clogged.

By pass filter

By pass filters take a small portion of oil from the pump and return the filtered oil into the sump. Over a period of operation, all the oil in the crankcase passes through the filter. Through the filter, the balance oil reaches directly to the engine parts.

Crankcase breather

The engine crankcase is always fitted with some kind of breather, connecting the space above the oil level with the outside atmosphere. During the operation of engine, the crankcase oil reaches a temperature of 160-170°F or even more and simultaneously the air above it gets heated up. Consequently the air is likely to expand and cause pressure rise if it were unable to escape. The purpose of breather is to prevent building up pressure in the crankcase. It serves as ventilating passage of air.

Relief valve

It is provided to control the quantity of oil circulation and to maintain correct pressure in the lubricating system.

6.4 Farm tractor

Tractor is a self propelled power unit having wheels or tracks for operating agricultural implements and machines including trailers. Tractor engine is used as a prime mover for active tools and stationary farm machinery through power take-off shaft (PTO) or belt pulley.

6.4.1 Tractor development

The present tractor is the result of gradual development of machine in different stages. History of tractor development is given below in chronological order.

1890: The word *tractor* appeared first on record in a patent issued on a *tractor* or *tractor engine* invented by George H.Harris of Chicago.

1906: Successful gasoline tractor was introduced by Charles W. Hart and Charles H. Parr of Charles city, Iowa (48A).

1920-1924: All purpose tractor was developed.

1936-1937: Diesel engine was used in tractor and pneumatic tires were introduced.

1960-61: Tractor manufacturing was started in India by first manufacturer M/s Eicher Good Earth.

1971: Escorts tractor Ltd started producing *ford* tractor.

1982 Universal tractors were established.

6.4.2 Classification and selection of tractors

Classification

Tractors can be classified into three classes on the basis of structural design:

(i) Wheel tractor (ii) Crawler tractor (track type or chain type) and (iii) Walking tractor (power tiller).

(i) **Wheel tractor:** Tractors, having three of four pneumatic wheels are called *wheel tractors.* Four wheel tractors are most popular every where.

(ii) Crawler tractor: This is also called *track type tractor or chain type tractor*. In such tractors, there is endless chain or track in place of pneumatic wheels.

(iii) Power tiller: Power tiller is a walking type tractor. This tractor is usually fitted with two wheels only. The direction of travel and its control for field operation is performed by the operator, walking behind the tractor.

On the basis of purpose, wheeled tractor is classified into three groups: General purpose (b) Row crop and (c) Special purpose.

(a) General purpose tractor: It is used for major farm operations such as ploughing, harrowing, sowing, harvesting and transporting work. Such tractors have (i) low ground clearance (ii) increased engine power (iii) good adhesion and (iv) wide tyres.

(b) Row crop tractors: It is mainly designed to work in rows like planting, interculture etc. Such tractor is provided with replaceable driving wheels of different thread widths. It has high ground clearance to save damage of crops. Wide wheel track can be adjusted to suit inter row distance.

(c) Orchard tractors: These are special type of tractors, are mainly used in orchards. Such tractors have (i) less weight (ii) less width and (iii) no projected parts.

(d) Special purpose tractor: It is used for definite jobs like cotton fields, marshy land, hill sides, garden etc. Special designs are there for special purpose tractor.

6.4.3 Tractor components

A tractor is made of following main components: (1) I.C. engine (2) Clutch (3) Transmission gears (4) Differential units (5) Final drive (6) Rear or wheels (7) Front wheels (8) Steering mechanism (9) Hydraulic control and hitch system (10) Brakes (11) Power take-off unit (12) Tractor pulley and (13) Control panel.

6.4.4 Selection of tractor

(i) Land holding: Under a single cropping pattern, it is normally recommended to consider 1hp for every 2 hectares of land. In other words, one tractor of 20-25 hp is suitable for 40 hectares farm.

(ii) Cropping pattern: Generally 1.5 hectare/hp has been recommended where adequate irrigation facilities are available and more than one crop is taken. So a 30-35 hp tractor is suitable for 40 hectares farm.

(iii) Soil condition: A tractor with less wheel base, higher ground clearance and low overall weight may work successfully in lighter soil but it will not be able to give sufficient depth in black cotton soil.

(iv) Climatic conditions: For very hot zone and desert area, air cooled engines are preferred over water cooled engines. Similarly for higher altitude, air cooled engines are preferred because water is liable to be frozen at higher altitude.

(v) Repairing facilities: It should be ensured that the tractor to be purchased has a dealer at nearby place with all the technical skills for repair and maintenance of machine.

(vi) Running cost: Tractors with less specific fuel consumption should be preferred over others so that running cost may be less.

(vii) Initial cost and resale value: While keeping the resale value in mind, the initial cost should not be very high, otherwise higher amount of interest will have to be paid.

(viii) Test report: Test report of tractors released from farm machinery testing stations should be consulted for guidance.

6.4.5 Estimating the cost of tractor power

The cost of operation of tractor is divided under two heads known as *Fixed cost* and *Operating cost*.

Fixed cost includes: (i) Depreciation, (ii) Interest on the capital, (iii) Housing, (iv) Insurance and (v) Taxes.

Operating cost includes: (i) Fuel, (ii) Lubricants, (iii) Repairs and maintenance, and (iv) Wages.

Fixed cost

Depreciation: It is the loss of value of a machine with the passing of time.

$$D = \frac{C - S}{L \times H}$$

Where

D is the depreciation per year

C is the capital investment

S is the salvage value, 10% of capital

H is the number of working hours per year and

L is the life of machine in years

Interest: Interest is calculated on the average investment of the tractor taking into consideration the value of the tractor in first and last year.

$$I = \frac{C + S}{2} \times \frac{i}{H}$$

Where

I is the interest per hour

I is the % rate of interest per year

Housing: Housing cost is calculated on the basis of the prevailing rates in the locality. In general, it may be taken as 1% of the initial cost of the tractor per year.

Insurance: Insurance charge is calculated on the basis of the actual payment to the insurance company. In general, it may be taken as 1% of the initial cost of the tractor per year.

Taxes: Taxes is calculated on the basis of the actual taxes paid per year. In general, it may be taken as 1% of the initial cost of the tractor per year.

Operating cost

Fuel cost: It is calculated on the basis of actual fuel consumption in the tractor.

Lubricants: Charges for lubricants should be calculated on the actual consumption. In general, it may be takes 30 to 35% of the fuel cost.

Repairs and maintenance: It varies between 5 to 10% of the initial cost of the tractor per year.

Wages: It is calculated on the basis of actual wages of the driver.

Problem 1:

Calculate the cost of operation of a 35 HP tractor per hour and hp hour. Initial cost is Rs. 5,50,000-00, life of the tractor is 12 years, number of working hours are 1200 per year, interest on the capital is 10%, cost of the diesel is Rs. 40/- per litre, fuel consumption is 5 litres per hour, wages of the driver is Rs. 36,000/-, lubricants cost is 35% of the fuel cost, repairs and replacements is 10% of initial cost; housing, taxes and insurance is 1.5% each of the initial cost.

Solution

Data given: C = Rs. 5,50,000/-

L = 12 years

H = 1200 hours er year

i = 10%

Cost of diesel = Rs.40/- per litre

Fuel consumption = 5 litres/hour

Wages of the driver = Rs. 36,000/- per annum

Lubricants cost = 35% of fuel cost.

Repairs and replacements cost = 10% of initial cost

Housing, taxes and insurance = 1.5% each of the initial cost

Fixed cost

Depreciation

$$D = \frac{C - S}{L \times H} = \frac{550000 - 0}{12 \times 1200} = \text{Rs. } 38.19 \text{ per hour}$$

(Since salvage value is not given, hence it is taken as “0”)

Interest

$$I = \frac{C+S}{2} \times \frac{i}{H}$$

I = $\frac{550000+0}{2} \times \frac{10}{100} \times \frac{1}{1200}$ = Rs. 22.92 per hour

Housing cost

H = $\frac{1.5}{100} \times 550000 \times \frac{1}{1200}$ = 6.87 per hour

Similarly, Insurance is Rs. 6.87 and Taxes are Rs. 6.87 per hour

Total fixed cost per hour = 38.19+22.92+6.87+6.87+6.87 = Rs. 81.72

Operating cost

Fuel cost = 40 ×5 = Rs. 200.00 per hour

Lubricants cost = $\frac{35}{100} \times 200$ = Rs. 70.00 per hour

Repairs and replacements cost = $\frac{10}{100} \times 550000 \times \frac{1}{1200}$ = Rs. 45.83

Wages = $\frac{36000}{1200}$ = Rs. 30.00

Total operating cost per hour = 200+70+45.83+30 = Rs. 345.83

Total cost of operation per hour = Total fixed cost + Total operating cost

= 81.72 + 345.83 = Rs. 427.55

Total cost of operation per hp per hour = $\frac{427.55}{35}$ = Rs. 12.22

Lecture No.7

Tillage - primary and secondary tillage. M.B. plough – functions, constructional features, operational adjustments and maintenance.

7.0 Tillage

It is a mechanical manipulation of soil to provide favourable condition for crop production. Soil tillage consists of breaking the compact surface of earth to a certain depth and to loosen the soil mass, so as to enable the roots of the crops to penetrate and spread into the soil. Tillage may be called the practice of modifying the state of soil to provide favourable conditions for plant growth. Tillage operation is most labour consuming and difficult operation, compared to all subsequent operation in the field.

7.1 Objective of tillage

1. to obtain deep seed bed, suitable for different type of crops.
2. to add more humus and fertility to soil by covering the vegetation.
3. to destroy and prevent weeds.
4. to aerate the soil for proper growth of crops.
5. to increase water absorbing capacity of the soil.
6. to destroy the insects, pests and their breeding places and
7. to reduce the soil erosion.

7.2 Classification and types of tillage

Tillage is divided into two classes: 1. Primary tillage, 2. Secondary tillage

7.2.1 Primary tillage: It constitutes the initial major soil working operation. It is normally designed to reduce soil strength, cover plant materials, and rearrange aggregates. The operations performed to open up any cultivable land with a view to prepare a seed bed for growing crops in known as Primary tillage. Implements may be tractor drawn or animal drawn implements. Animal drawn implements mostly include indigenous plough and mould-board plough. Tractor drawn implements include mould-board plough, disc plough, subsoil plough, chisel plough and other similar implements.

7.2.2 Secondary tillage: Tillage operations following primary tillage which are performed to crease proper soil tilth for seeding and planting are Secondary tillage. These are lighter and finer operations, performed on the soil after primary tillage operations. Secondary tillage consists of

conditioning the soil to meet the different tillage objectives of the farm. The implements used for secondary tillage operations are called Secondary tillage implements. They include different types of harrow, cultivators, levelers, cited crushers and similar implements. These operations are generally done on the surface soil of the farm. Seconday tillage operations do not cause much soil inversion and shifting of soil from one place to other. These operations consume less power per unit area compared to primary tillage operations. Secondary tillage implements may be tractor drawn or bullock drawn implements. Bullock drawn implements include harrows, cultivators, hoes etc.

7.3 Indigenous plough

Indigenous plough is one of the most common implements used by Indian farmers. There are about 40 or more different types of indigenous ploughs in this country which are basically the same, but with variations in their shape, size and weight. These variations are due to soil types and tillage requirements of various crops.

In addition to ploughing, the plough is used for sowing crops like wheat, barley, gram etc., for interculture and for harvesting the underground part of crops.

The main parts of the plough are i) body ii) shoe iii) share iv) beam and v) handle. The body is the main part of the plough to which the shoe, beam and handle are generally attached. The share is the working part of the plough, and is attached to the shoe, which penetrates into the soil and breaks it open. The shoe also helps in stabilizing and balancing the plough while in operation. The beam is generally a long wooden piece which connects the main body of the plough to the yoke. A wooden piece which is attached vertically to the body to enable the operator to control the plough is called the handle.

7.3.1 Ploughing by indigenous plough

When the plough is pulled forward, the shoe and share enter the soil and separate the furrow slice from the main body of the soil. A portion of the soil rides over the shoe, but the larger portion is pushed aside to both sides. After the plough has moved ahead leaving the furrow behind, some of the cut soil falls back into the furrow. It has been observed that an indigenous plough cuts

a trapezoidal furrow cross section and leaves some unploughed land between the two adjacent furrows. To plough almost every bit of soil in the field, an indigenous plough has to be used three times. This is the main reason for the high energy and time requirements in using an indigenous plough as compared to other types. For complete and through ploughing of a field, the indigenous plough must be operated three times: first ploughing, then cross ploughing and finally ploughing along the corners.

7.4 Mould board plough

A mouldboard plough is very common implement used for primer tillage operations. This plough performs several functions at a time such as (1) Cutting the furrow slice (2) Lifting the furrow slice (3) turning the furrow slice (4) Pulverizing the soil.

7.4.1 Components

M.B. Plough consists of (a) Share, (b) Mould Board, (c) Landside and (d) Frog (Fig.15).

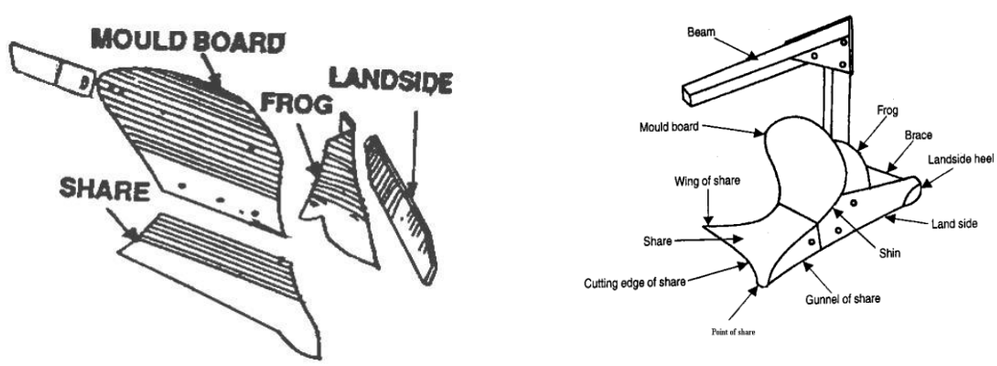

Fig. 15. Components of mould board plough

Share

It is the part of the plough bottom (Fig.16), that penetrates into the soil and cut the soil in horizontal direction below the soil surface is called share. It is a sharp, well polished and pointed component.

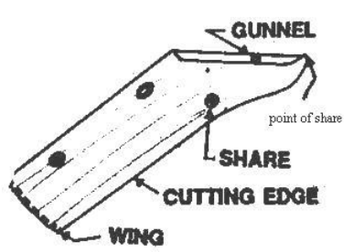

Fig.16. Parts of share

Different portions of the share are called by different names such as (I) share point, (ii) cutting edge, (iii) wing of the share (iv) gunnel (v) clevage edge.

The forward end of the cutting edge which actually penetrates into the soil is called share point.

The front edge of the share which makes horizontal cut in the soil is called cutting edge if the share.

The outer end of the cutting edge of the share is called wing of the share. It supports the plough bottom.

The vertical face of the share which slides along the furrow well is called gunnel. It takes the side thrust of the soil and supports the plough bottom against the furrow wall.

The edge of the share which forms joint between mould board and share on the frog. The shares are made of chilled cast iron or steel. The steel mainly contains about 0.7-0.8% carbon and about 0.5-0.8% manganese besides other minor elements.

Types of share

Share is of different such as (a) slip share (b) slip nose share (c) shin share (d) bar share and (e) bar point share (Fig.17).

a) Slip share: it is one piece with curved cutting edge having no additional part. It is a common type of share, mostly used by the farmers. It is simple in design, but it has got the disadvantage that the entire share has to be replaced if it is worn out due to constant use.

b) Slip nose share: it is a share in which the point of the share is provided by a small detachable piece. It has the advantage that the share point can be replaced as and when required . If the point is worn out, it can be changed without replacing the entire share, effecting considerable economy.

c) Shin share: it is a share, having a shin as an additional part. It is similar to the slip share with the difference that an extension is provided to fit by the side of the mould board. This prevents the mouldboard from wearing along its cutting edge.

d) Bar share : It is provided with an extension on its gunnel side which acts as the landside of the plough bottom. It does not offer any advantage over the other types.

e) Bar point share: it is a share, in which the point of the share is provided by an adjustable and replaceable bar. This bar serves the purpose of point of the share and landside of the plough. As the point wears out, it is pushed forward.

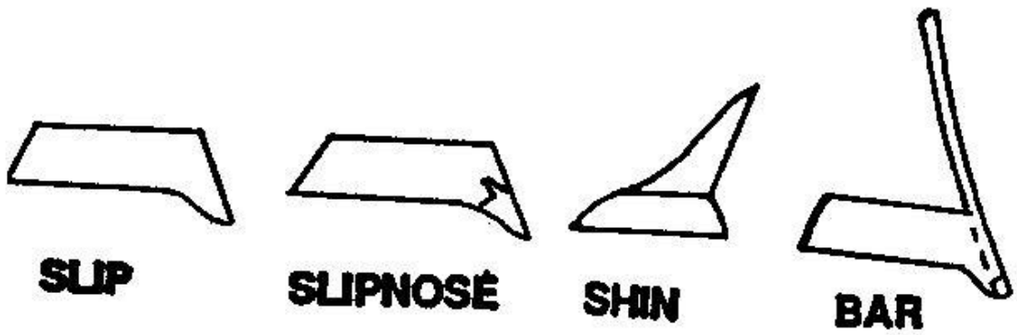

Fig.17. Types of share

Mould Board

Mould board is the part of the plough, which receives the furrow slice from the share, it lifted, turns and breaks the furrow slice. Different soil conditions require mould boards of varying shapes and sizes to carryout a good job of ploughing. The texture of the soil, amount of moisture and extent of vegetative cover on the surface determine the soil pulverization. The pulverization and inversion depend upon the curvature of the mouldboard. A long, gradual curved mouldboard turns the furrow gently and does not break the soil much. Short, abruptly curved mould boards twist and shear the soil and pulverize it. Mouldboards for general use fall between the two extremes of the conditions. Mould boards are made of cast iron.

The mould board is of following types (Fig.18): (i) General purpose (ii) stubble (iii) sod and breaker (iv) slat and (v) high speed.

(i) General purpose mould board

It is the best for all round general farm use to give through pulverization. It is a mould board having medium curvature lying between stubble and sod. The sloping of the surface is gradual. It turns the well-defined furrow slice and pulverizes the soil thoroughly. It has a fairly long mould board with a gradual twist, the surface being slightly convex.

(ii) Stubble mould board

It is adopted for ploughing an old ground where good pulverization is desired. Its curvature is not gradual, **but it is abrupt along the top edge**. This causes the furrow slice to be thrown off quickly, pulverization is much better than

the other type of mould board. It is best suited in stubble soil i. e under cultivation for years together. Stubble soil is that, soil in which stubble of the plants from the previous crop is still left on the land at the time of ploughing. This type of mould board is not suitable for lands with full of grasses.

(iii) Sod and breaker type mould board

It is a long mould board with gentle curvature which lifts and inverts the furrow slice. It is used in tough soils of grasses. It turns over thickly covered soil. This is very useful where complete inversion of soil is required by the farmer. This type has been designed for use in sod soils.

(iv) Slat type mould board

It is a mould board whose surface is made of slats placed along the length of the mould board, so that there are gaps between the slats. This type of mould board is often used, where the soil is sticky, because the solid mould board does not score well in sticky soils.

(v) High speed type mould board

Most of the high speed bottoms are used on tractor ploughs for general farm use.

Land side

Landside is the part of the plough bottom, which **slides** along the furrow wall, providing stability against tilting sideways, due to soil pressure acting on the mould board.

The width of the landside of animal drawn plough varies between 5 and 10 cm. It also helps in stabilizing the plough while in operation. Landside fastened to the frog with the help of plough bolts. The rear bottom of the landside is known as heal which rubs against the furrow sole.

Frog

Frog is the part of the plough bottom to which the share, mould board and land side are attached rigidly. It is an irregular piece of metal casting and heart of the plough bottom. It may be made of either cast iron or steel.

7.4.2 Plough accessories: there are few accessories are necessary for plough such as: (a) coulter, (ii) jointer and (iii) gauge wheel (Fig.19).

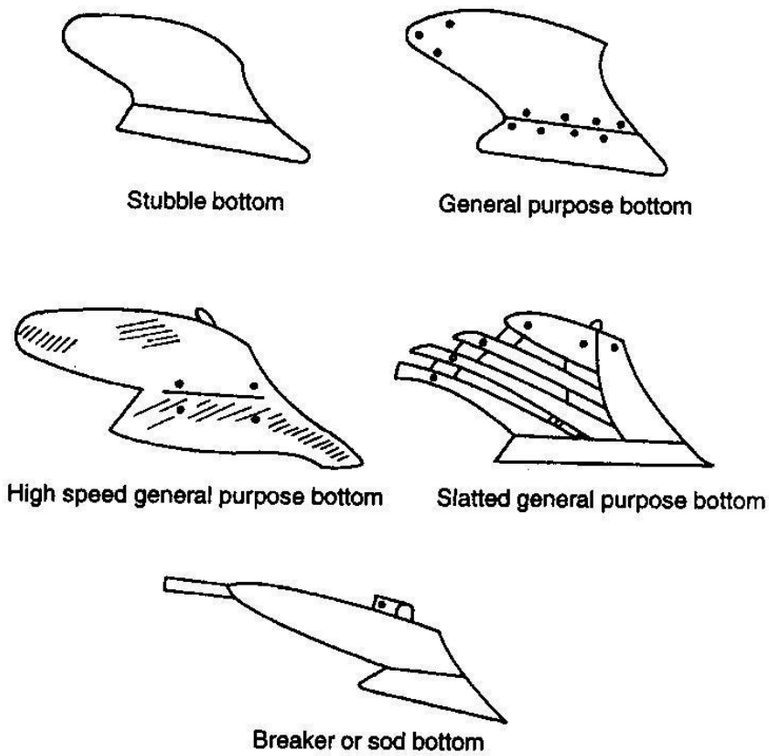

Fig.18. Types of mould board

Coulter

It is device used to cut the furrow slice vertically from the land ahead of the plough bottom. It cut the furrow slice from the land and leaves a clear wall. It also cuts trashes which are covered under the soil by the plough. The coulter may be a) rolling type b) sliding type.

(a) Rolling coulter

It is **round steel disc**, used on ploughs to cut trash and help to keep the plough from clogging. In general, the coulters should be set about 5cm shallower than the depth of ploughing. To obtain a neat furrow wall, the coulter is usually set 2 cm outside the landside of the plough. It is so fitted that it can be adjusted up and down and side ways.

(b) Sliding coulter

It is a **stationery knife** fixed downward in a vertical position on the ground. It includes knife, which does not roll over the ground but slides on the ground, the knife may be different shapes and sizes.

Jointer

It is a small irregular piece of metal having a shape similar to an ordinary plough bottom. **It looks like a miniature plough**. The jointer should be set to cut 4 to 5 cm deep. The purpose of the jointer is to cut a small furrow off the

main furrow slice and throw it towards the furrow. The jointer should be set as near the coulter as possible.

Gauge wheel

It is an auxiliary wheel of an implement**,** helps to maintain uniformity in respect of depth of sloughing in different soil conditions it is usually placed in hanging position.

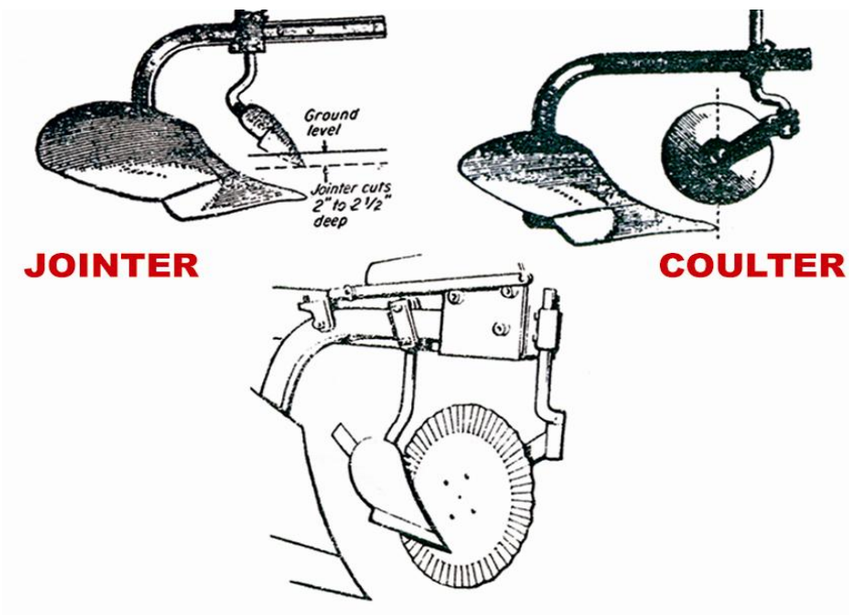

Throat clearance

Fig. 19. Plough accessories of M.B.Plough

7.5 Adjustments of mould board plough

For proper penetration and efficient work, the mould board ploughs need some clearance where the share joins the landside. This clearance is called suction of the plough. Suction in mould board plough is of two types (Fig.20): (i) Vertical suction and (ii) Horizontal suction.

If a straight edge is placed under the point of the share and the landside, a clearance of 0.3 to 0.5 cm should be measured. It is known as the vertical suction of the plough. Similarly, there should be side clearance of about 0.5 cm in such ploughs. Side clearance is also known as horizontal suction of the plough. If the share worn out, these clearances are vary much reduced, with the result that, the plough does not penetrate properly into the soil.

Throat clearance

It is the perpendicular distance between point of share and lower position of the beam of the plough.

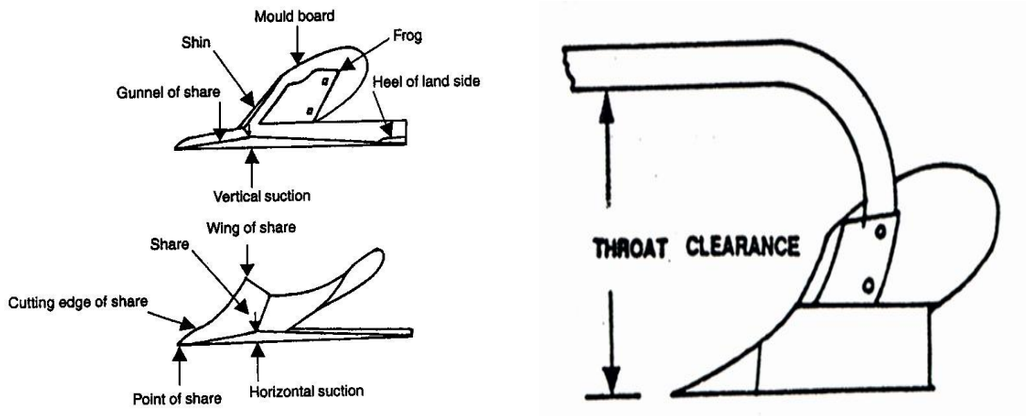

(a) (b)

Fig.20. (a) Vertical suction, horizontal suction and (b) throat clearance of M.B.Plough

Plough size

The size of mould board is expressed by the width of furrow that is designed to cut. It is the perpendicular distance from the wing of the share to the line joining the point of share and the heel of the landside. Animal drawn ploughs are usually available in the range between 15 and 20 cm. The size of the light plough is above 100 mm width but below 150 mm; medium plough is 150 to 200 mm and heavy plough is 200 mm and above.

Vertical clevis: it is a vertical plate with a no of holes at the end of the beam to control the depth of operation and to adjust the line of pull.

Horizontal clevis: it is a device to make the lateral adjustment of the plough relative to the line of pull.

The centre of pull or resistance: It is the point where all the forces on a plough are act. The centre lies at a distance equal to ¾th size of the plough from wing of the share.

Lecture No.8

Disc plough – functions, constructional details, operational adjustments and maintenance.

8.0 Disc ploughs

It is a plough (Fig.21) which cuts, turns and in some cases breaks furrow slices by means of separately mounted large steel discs. A disc plough is designed with a view to reduce friction by making a rolling plough bottom. A disc plough works well in the conditions where mould board plough does not work satisfactorily.

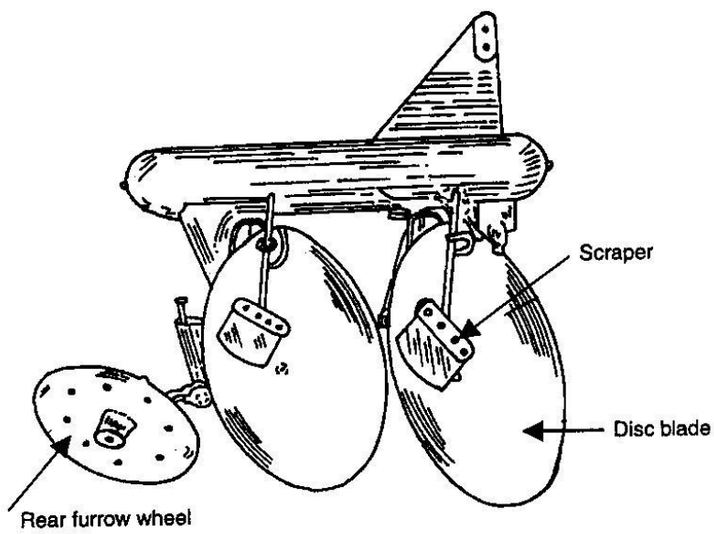

Fig. 21. Parts of disc plough

8.1 Advantages of disc plough

(i) A disc plough can be forced to penetrate into the soil which is too hard and dry.

(ii) It works well in sticky soil in which a mould board plough does not scour. It is more useful for deep ploughing.

(iii) It can be used safely in stony and stumpy soil without much danger of breakage.

(iv) A disc plough works well even after a considerable part of a disc is worn off in abrasive soil.

(v) It works in loose soil also (such as peat) without much clogging.

8.2 Disadvantages of disc plough

(i) It is not suitable for covering surface trash and weeds affectively as mould board plough does.

(ii) Comparatively, the disc plough leaves the soil in rough and cloddy condition than that of mould board plough.

(iii) Disc plough is much heavier than mould board plough for equal capacities because penetration of this plough is affected largely by its weight rather than suction. There is one significant difference between mould board plough and disc plough i.e., mould board plough forced into the ground by the suction of the plough, while the disc plough is forced into the ground by its own weight.

Disc: It is a circular, concave revolving steel plate used for cutting and inverting the soil. It is made of heat treated steel of 5 to 10 mm thickness. The edge of the disc is well sharpened to cut the soil.

Disc angle: It is the angle at which the plane of the cutting edge of the disc is inclined to the direction of travel. Usually, the disc angle of good plough varies between 42 and 45^0 (Fig.22).

Tilt angle: It is the angle at which the plane of the cutting edge of the disc is inclined to vertical plane. Usually, the tilt angle of good plough varies between 15 and 25^0(Fig.22).

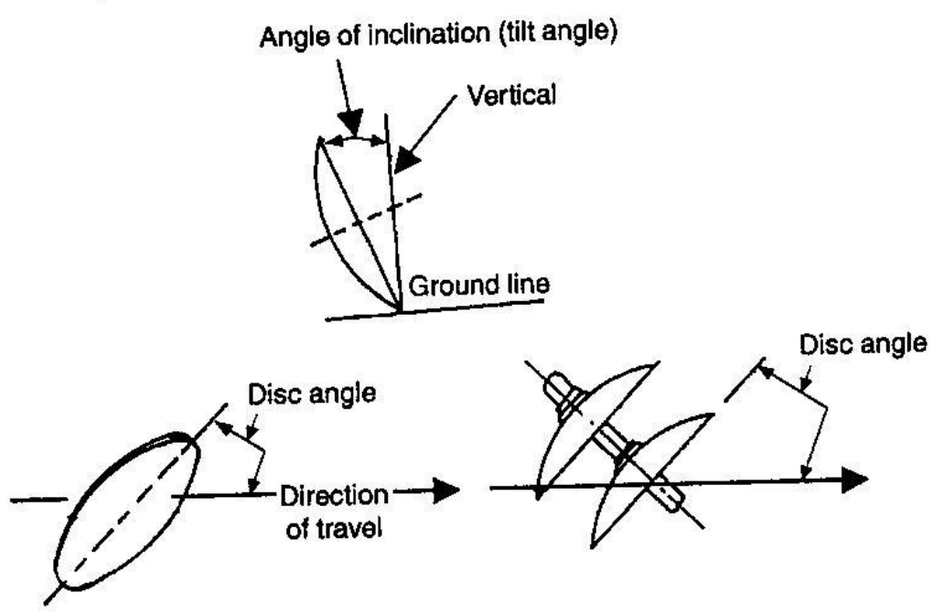

Fig. 22. Tilt angle and disc angle of disc plough

Scraper: It is a device to remove soil that tends to stick to the working surface of a disc.

Concavity: It is the depth measured at the center of the disc by placing its concave side on a flat surface.

Disc ploughs are favoured in areas where the climate is dry and where the soil is rough and stony. They also work well in heavy clay, hard pan and loose sandy soils. Such soil conditions do not permit the operation of mould board ploughs to good advantage. It is also preferred for land infested with heavy growth of vegetation and for land requiring deep ploughing for reclamation purposes. It leaves the trash on top of the ground to conserve soil moisture. Penetration of the disc plough depends mainly on the weight of the plough as a whole. Tractor drawn disk ploughs weigh between **180 and 540 kg** per disk. But the animal drawn plough weighs about 30 kg per disk.

Disc ploughs are broadly classified as:

1. Standard disc plough - animal drawn and tractor drawn
2. Vertical disc plough or harrow ploughs

8.3 Animal drawn standard disc plough

It is attached to a universal frame which is mounted on two wheels. The frame is pulled by a pair of bullocks and it is provided with a seat for the operator. There is only one disk blade on these ploughs and it can be tilted back ward from 15 to 25^0 (tilt angle) in the vertical plane. It also makes an angle of about 45^0 (disk angle) with the direction of motion. The diameter of the disk is 45 cm. A rear furrow wheel provided with the plough takes care of the side thrust of the plough.

8.3.1 Tractor drawn standard disc plough

It consists of **one to seven** disk blades which have the same tilt and disk angles as the animal drawn plough. The diameter of the disk blades varies between **60 and 90 cm.** The perfectly round concave steel disks sharpened on the edges are bolted to the cast iron supports which are individually suspended from the main frame. Taper roller bearings or thrust type ball bearings are used on the ploughs. These ploughs are provided with a front furrow wheel, a rear furrow wheel and a land wheel. There are also provided with depth adjusting levers, drag links and scrapers on the plough. When the plough is pulled forward, the individual disk rotates on its own axis. The furrow slice rides along the curvature and is pulverized to some extent. In order to cut a deeper furrow slice, the tilt angle of the disk is reduced. The other method of increasing the penetration is by adding weights to the plough frame. If the soil condition is favourable, the tilt angle should be increased to achieve better turning of the furrow slice. If the soil condition is not

favourable, the disk angle should be increased to improve the penetration, but the width of cut should be reduced (Fig.23).

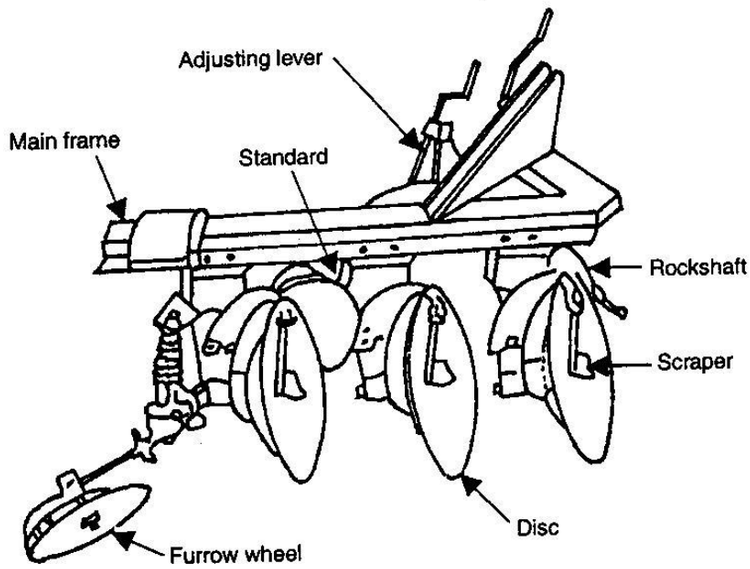

Fig. 23. Standard disc plough

8.4 Vertical disk plough

It is known as harrow plough or one way disc plough. Its action is intermediate between regular disc plough and disc harrow. It is similar to standard disk plough, major difference is that, all the disk blades are mounted on a common axle and they rotate as one unit. The diameter & curvature of the individual disk of the plough is slightly smaller. All the disks are fixed to throw the furrow slice is only one direction. It may have **2 to 32** disks, spaced about 20 to 25 cm apart on a gang. These are used for shallow ploughing and are preferred in wheat growing areas, where moisture conservation for winter crops is the main objective. Diameter of the disk varies between **50 and 65** cm and the disk angle ranges from 40 to 45^0. Disc angle of 40 to 45° gives the minimum draft for a given width of cut (Fig.24).

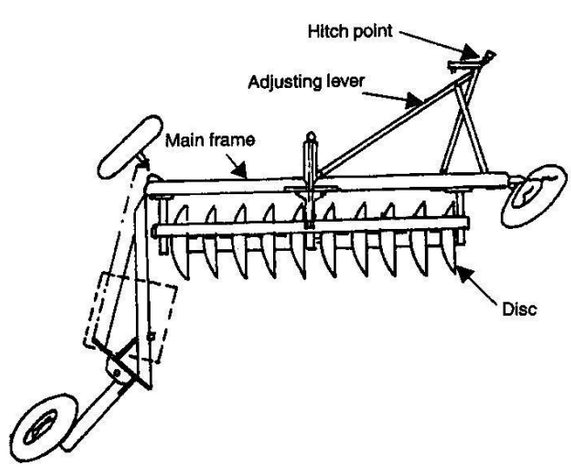

Fig. 24. Vertical disc plough

The following adjustments that are done on the disk ploughs to control the depth or width of ploughing or to increase the pulverization:

(i) by increasing the tilt angle, penetration is improved.

(ii) by increasing the disk angle, penetration is improved but the width of cut is reduced.

(iii) by adding weights to the plough, penetration can be increased.

(iv) the width of the cut by the plough may be adjusted by adjusting the angle between the frame and land wheel axle.

Lecture No.9

Numerical problems on M.B. plough and disc plough.

Draft: It is the horizontal component of the pull parallel to the line of motion.

Metric hp = $\frac{Draft \times speed}{75}$

Where draft in kg

Speed in m/s

Draft depends upon: (1) sharpness of cutting edge, (2) working speed, (3) working width, (4) working depth, (5) type of implement, (6) soil condition, and (7) attachments.

Unit draft: It is the draft per unit cross-sectional area of the furrow.

Theoretical field capacity: It is the rate of field coverage of the implement, based on 100 percent of time at the rated speed and covering 100 percent of its rated width.

Theoretical field capacity = $\frac{W \times S \times 36}{10000}$

Where, Theoretical field capacity in ha/hr

W is the width of cut of machine in cm

S is the speed of travel in m/s

Effective field capacity (C): It is the actual area covered by the implement based on its total time consumed and its width.

C = $\frac{S \times W}{10} \times \frac{E}{100}$

Where C is the effective field capacity, ha/hr

S is the speed of travel in kmph

W is the theoretical width of cut of the machine in m

E is the field efficiency in percent

Field efficiency: It is the ratio of effective field capacity and theoretical field capacity expressed in percent.

Problem 1: Determine the horse power required to pull a four bottom 32 cm plough, working to depth of 14 cm. The tractor is operating at a speed of 5.5 kmph. The soil resistance is 0.8 kg/cm^2.

Solution:

Total width of ploughing = 32×4 = 128 cm

Furrow cross section = 128 ×14 = 1792 cm^2

Total draft = soil resistance × furrow cross section

= 0.8 × 1792 = 1433.6 kg

HP = $\frac{Draft \times speed}{75}$ = $\frac{1433.6 \times 5.5 \times 1000}{75 \times 3600} = 29.2$

Problem 2: Calculate the area covered per day of 8 hours by a tractor drawn four bottom 35cm plough if the speed of the ploughing is 5kmph, the time lost in turning is 10%.

Solution:

Area covered per hour = $\frac{4 \times 35}{100} \times 5 \times 1000$ = 7000 m^2

Area to be covered in 8 hrs = 7000×8 = 56,000 m^2 = $\frac{560000}{10,000}$ = **5.6 ha**

Turning loss = $\frac{5.6 \times 10}{100}$ = **0.56 ha**

Actual area covered in 8 hrs = 5.6 – 0.56 = 5.04 ha

Problem 3: Calculate the size of a tractor to pull a four bottom 35 cm MB plough through a depth of 8 cm. The soil resistance is 0.8 kg/cm^2. The speed of the tractor is 5.5 kmph, transmission and tractive efficiency of the tractor being 80% and 30% respectively.

Solution:

Furrow cross section = $4 \times 35 \times 8$ = 1120 cm^2

Total draft = 1120 ×0.8 = 896 kg

HP = $\frac{896 \times 5.5 \times 1000}{75 \times 3600} \times \frac{1}{0.8} \times \frac{1}{0.3} = 76$

Problem 4: Total draft of four bottom, 35 cm MB plough when ploughing 18 cm deep at 5 kmph speed is 1600 kg. (a) Calculate the unit draft in kg/cm^2 (b) What is actual power requirement? (c) If the field efficiency is 75% what is the rate of doing work in ha/hr.

Solution:

Unit draft = $\frac{1600}{4 \times 35 \times 18}$ = 0.635 kg/cm^2

HP requirement= $\frac{1600 \times 5 \times 1000}{75 \times 3600}$ = 29.6

C = $\frac{S \times W}{10} \times \frac{E}{100}$

Where C is the effective field capacity, ha/hr

S is the speed of travel in kmph

W is the theoretical width of cut of the machine in m

E is the field efficiency in percent

Area covered per hr i.e., C = $\left(\frac{5 \times 4 \times 35}{10 \times 100}\right) \times \frac{75}{100} = 0.525$ ha/hr

Lecture No.10

Harrows – types, functions, operation of disc harrows. Cultivators – rigid and spring loaded tynes. Puddlers, cage wheel, rotovators. Intercultural implements – hoes and weeders for dry and wetland cultivation.

10.0 Harrowing

It is secondary tillage operation which pulverizes, smoothens and packs the soil in seed bed preparation and/or to control weeds.

10.1 Harrow

A harrow is a implement that cuts the soil to a shallow depth for smoothening and pulverizing the soil as well as to cut the weeds and to mix materials with soil. It is an implement used to break the clods after ploughing, to collect trash from the ploughed land and to level the seed bed.There are several types of harrows used in India are mentioned below:

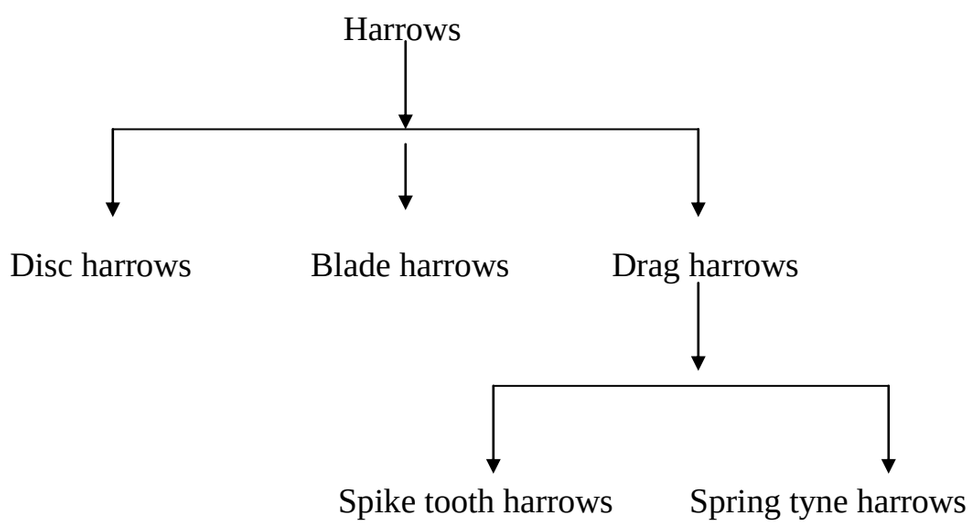

10.2 Disc harrow

It is harrow which performs the harrowing operations by means of a set (or a number of sets) of rotating steel discs, each set being mounted on a common shaft. Disc harrows are of two types depending upon the sources of power:

1. Tractor drawn
2. Animal drawn.

Tractor drawn disc harrow: Disc harrow is found very suitable for hard ground, full of stalks and grasses. It cuts the lumps of soil, clods and roots. Discs are mounted on one, two or more axles which may be set at a variable angle to the line of motion. As the harrow is pulled ahead, the discs rotate on the ground. Depending upon the disc arrangements, disc harrows are divided into two classes (Fig.25): (i) single action, and (ii) double action.

Single action disc harrow

It is a harrow with two gangs placed end to end, which throw the soil in opposite directions. The discs are arranged in such a way that right side gang throws the soil towards right, and left side gang throws the soil towards left.

Double action disc harrow

A disc harrow consisting of two or more gangs, in which a set of one or two gangs follow behind the set of the other one or two, arranged in such a way that the front and back gangs throw the soil in opposite directions. Thus the entire field is worked twice in each trip. It may be of two types:

(i) Tandem, and

(ii) Off-set.

Tandem disc harrow

It is a disc harrow comprising of four gangs in which each gang can be angled in opposite direction.

Off-set disc harrow

It is a disc harrow with two gangs in tandem, capable of being off-set to either side of the centre line of pull. Two gangs are fitted one behind the other. The soil is thrown in both directions because discs of both gangs face in opposite directions. It is very useful for orchards and gardens. It travels left or right of the tractor. The line of pull is not in the middle, that's why it is called off-set disc harrow (Fig.25).

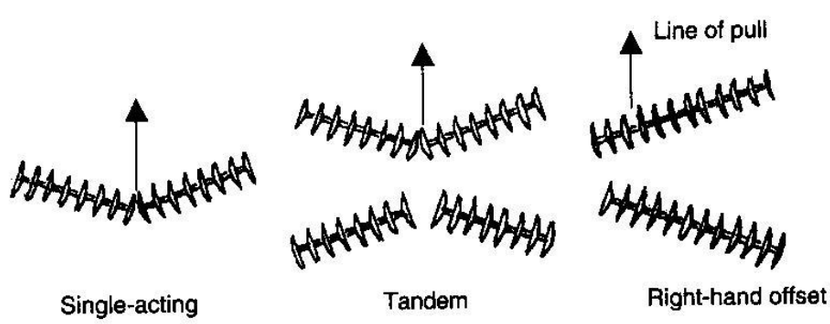

Fig. 25. Tractor drawn disc harrows

10.3 Components of disc harrow

A disc harrow mainly consists of: (i) disc, (ii) gang, (iii) gang bolt or arbor bolt, (iv) gang angle, (v) gang control lever, (vi) spools or spacer, (vii) bearings, (viii) transport wheels, (ix) scraper and (x) weight box.

1. Disc: It is a circular, concave revolving steel plate used for cutting and inverting the soil. Disc is made of high grade heat treated hardened steel. Tractor drawn disc harrows have concave discs of size varying from 35 to 70 cm diameter. Concavity of the disc affects penetration and pulverization of soil. Usually two types of disc are used in disc harrows: (a) Plain disc and (b) Cut-away disc.

Plain discs have plain edges and they are used for all normal works. Most of the harrows are fitted with plain discs only. Cut-away discs have serrated edges and they cut stalks, grasses and other vegetative matter better than plain discs. Cut-away discs are not very effective for pulverization of soil but it is very useful for pudding the field especially for paddy cultivation.

2.Gang: It is an assembly of concave discs mounted on a common shaft with spools in between.

3. Gang axle or arbor axle: It is a shaft on which a set of discs are mounted. The spacing between the discs on the gang bolt ranges from 15cm to 23cm for light duty harrows and 25 to 30 cm for heavy duty harrows.

4. Gang angle: The angle between the axis of the gang and the line perpendicular to the direction of travel is called *Gang angle.*

5. Gang control lever: A lever which operates the angling mechanism of disc harrow is called *Gang control lever.*

6. Spool or Spacer: The flanged tube, mounted on the gang axle between every two discs to retain them at fixed position laterally on the shaft is called spool or spacer. It is just a device for keeping the discs at equal spacing on the axle. It is usually cast in special shapes and sizes and is generally made of cast iron.

7. Bearing: Bearing is essential to counteract the end thrust of the gangs due to soil thrust. Disc harrow bearings are subjected to heavy radial and thrust loads. Chilled cast iron bearings, ball bearings or tapered roller bearings may be used on disc harrows. Oil soaked wooden bearings are very common for disc harrows, because they are cheaply available. Chilled cast iron bearings are also used due to their durability.

8. Transport wheel: In trailing type discs harrows, transport wheels are provided for transport work on roads and for preventing the damage of the roads. This also helps in protecting the edges of the discs. Mounted type disc harrows do not require wheels for transport purpose.

9. Scraper: Scraper prevents the discs from clogging. It removes the soil that may stick to the concave side of the disc.

10. Weight box: A box like frame is provided on the main frame of the harrow for putting additional weight on the implement. Additional weight helps in increasing the penetration of the discs in the soil.

Penetration of disc harrow

There are several factors which affect the penetration of disc harrow in the field. If the disc gangs are set perpendicular to the line of draft, the penetration is not adequate. Penetration can be increased by adding some additional weight on the frame of the harrow. For obtaining maximum penetration, the gangs should be set with the forward edges of the disc parallel to the direction of motion. If the hitch point is lowered, better penetration is achieved.

A sharp edged disc has more effective penetration compared to blunt edged disc. It is observed that penetration is better in low speed than in high speed. In short, the following are a few adjustments for obtaining higher penetration.

1. By increasing the disc angle.
2. By adding additional weight on the harrow.
3. By lowering the hitch point.
4. By using sharp edged discs of small diameter and lesser concavity and
5. By regulating the optimum speed.

10.4 Care and maintenance of disc harrow

Bearing must be thoroughly greased at regular intervals. All the nuts and bolts must be checked daily before taking the implement to the field. Blunt edges of the discs should be sharpened regularly. During slack season, the worn parts including bearings should be fully replaced. It is better to coat the outer and inner surfaces of the discs when the harrow is lying without use in slack season.

10.5 Animal drawn disc harrow: It consists of: (i) disc, (ii) gang frame, (iii) beam, (iv) gang angle mechanism, (v) scraper, (vi) spacer(spool), (vii) clevis, (viii) axle, (ix) middle tyne, and (x) bearings (Fig.26).

1. Disc: Disc is the main part of the harrow which cuts and pulverizes the soil. Discs are arranged in two gangs. The thickness of the material used for disc is at least 3.15 nm. The cutting edge is beveled for easy penetration. The disc has a square opening in the centre to allow the passage of the axle. The disc is usually made of steel with carbon content ranging from 0.80 to 0.90%.

2. Gang frame: All the gangs are mounted on a frame, called Gang frame. It is usually made of sturdy mild steel structure. The gang frame is bolted to the beam of the implement.

3. Beam: It is that part of the harrow which connects the implement with the yoke. The rear end of the beam has a clevis to fix its height of hitching to suit the size of animals. It is made of wood which is locally available in the area.

4. Gang angle mechanism: It is a mechanism by means of which the gang angles are adjusted. Arranged of adjusted the width and depth of cuts of the implement, is done by gang mechanism. The lever of the gang angle is usually made of mild steel flat with a wooden handle. The gang angle can be adjusted approximately in the range from 0º to 27 º only.

5. Scraper: It is that part of the harrow which scrapes the soil from the concave side of the disc and keeps it clean for effective working of the harrow in the field.

6. Spacer (spool): Spacer is used to separate the two adjacent discs and to keep them in position. It is usually made of cast iron. The spacer has a suitable square opening in the middle to allow the passage of the axle.

7. Clevis: Clevis is the part fitted to the beam and the frame which permits vertical hitching of the harrow.

8. Axle: The axle is usually 20 × 20 mm square section. The length of axis depends upon the size of the harrow.

9. Middle tyne: The tyne which breaks the unbroken strip of soil left in between two gangs of the harrow during operation is called middle tyne. This tyne is suitable fixed to the rear end of the gang frame in such a way that it is replaced easily.

10. Bearing: There is one or two bearings, made of cast iron or wood fitted at each end of the gang.

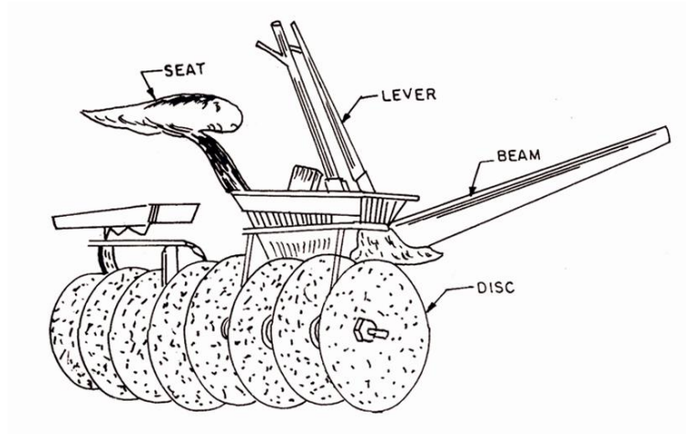

Fig.26. Animal drawn disc harrow

10.6 Drag harrows

Drag harrows have been used since ancient times; early farmers used to cut branches from the trees for use in leveling the soil. Even today in some places farmers drag long bamboo pieces with long nails to break the soil crust and stir the surface. These harrows are used to break the clods, to stir the soil, to uproot the early weeds, to level the ground, to break the soil crust and to cover the seeds. There are two principal kinds of drag harrows, namely, (1) spike tooth and (2) spring type harrow.

Spike tooth harrows are either rigid or flexible. The flexible type tractor drawn can be rolled up for transporting. But the animal drawn harrows are always of rigid frame type. There may or may not be provision for changing the angle of the spikes while operating the harrow. The basic frame of the harrow may be triangle (Fig.27). It has pointed steel pegs (teeth) about 23 cm long with their pointed ends towards ground. Each peg is rigidly clamped with the help of a U-bolt to the cross bars of the frame. In the case of harrows with a wooden frame, the pegs have threatened ends to be tightened from the top. Generally the wooden frame is triangular in shape, and the pegs are fixed along the three arms of the frame. Before operating the harrow in the field, adjustments should be made for efficient and effective operation. The peg point is tilted backward vertically so that soil is not accumulated in the front. The pegs of the rigid harrows are fixed slightly tilted so that no arrangement is needed to change the angle. The harrow is dragged over the surface by means of a chain or rope tied to the yoke. The animal drawn harrows cover almost 1 to 1.2 m width and are used to stir the soil to a depth of about 5 cm. The depth of penetration can be increased by adding weights to the frame.

Spring tyne tractor drawn harrows have looping, elliptical or spring like tynes. But the animal drawn unit is only provided with elliptical tynes. They

are used extensively to prepare ploughed land before planting. They penetrate much deeper than spike tooth harrows and are generally used in the soil where obstructions like stones, roots and weeds are hidden a few centimeters below the surface. The basic frame of the harrow is mostly rectangular. The spring tynes are bolted staggered on to the frame to avoid clogging during operation.

Spike tooth and spring tyne harrows do not require lubrication. The harrow teeth, however, are adjustable and may be loosened and turned to present a new cutting edge when they wear out. Teeth may also be removed for sharpening. Spring tyne harrows can be sharpened by grinding. The spikes of the spike tooth harrow are either square or diamond shaped and are of the self sharpening type.

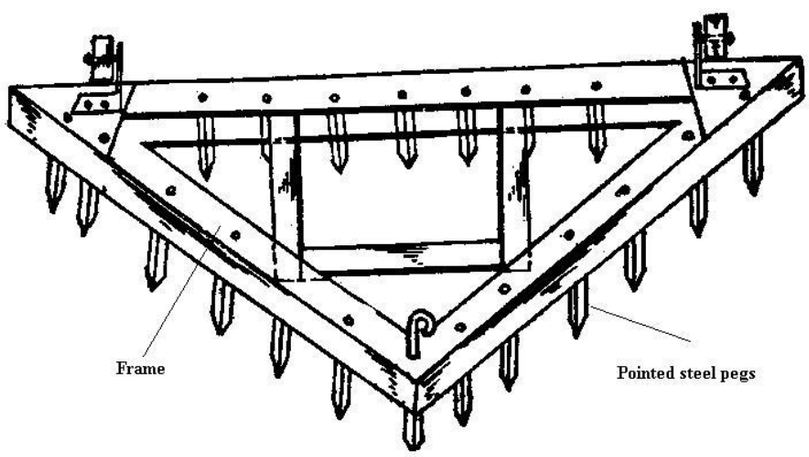

Fig. 27. Peg tooth or triangular harrow

10.6.1 Blade harrows

The blade harrows popularly known as *bakhar,* is the most common type of harrow used by Indian farmers. It is generally used in clay soils for preparing seedbeds of both *kharif* (rainy season) and *Rabi* (winter) crops. It is also used for covering the seed in *Kharif* sowing. The action of blade harrow is like that of sweep, moving into the top surface of the soil without inverting it. Sometimes, it is used to chisel out the uncut portion left after ploughing by an indigenous plough. Thus the primary function of the implement is to pulverize the soil and create soil mulch. The blade is made of steel. *Shisham* or *Babool* wood is used for making the body and the beam. The width cut by the harrow varies from 38 to 105 cm (Fig.28). *Guntaka* also is an improved type of this implement.

Frequent clogging with the roots and weeds which wrap along the edge of blade possess a serious problem and stoppage of work. However, the

improved V-shaped blade if fitted on the implement can provide relief from clogging.. Besides, it offers the advantage of reduction in draft, easy penetration and smooth working in the field.

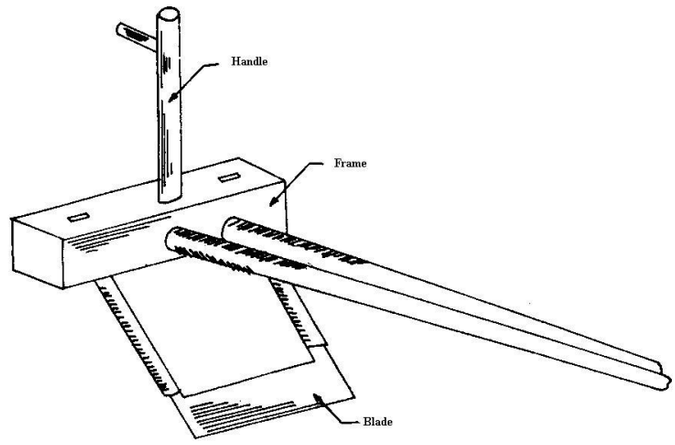

Fig. 28. Blade harrow

10.7 Cultivator

10.7.1 Cultivator with spring loaded tines

A tine hinged to the frame and loaded with a spring so that it swings back when an obstacle is encountered, is called spring loaded tine. Each tine of this cultivator is provided with two heavy coil springs, tensioned to ensure minimum movement except when an obstacle is encountered. The springs operate, when the points strike roots or large stones by allowing the tines to ride over the obstruction, thus preventing damage. On passing over the obstruction, the tines are automatically reset and work continues without interruption. The tines are made of high carbon steel and are held in proper alignment on the main frame members. This type of cultivator is particularly recommended for soils which are embedded with stones or stumps. A pair of gauge wheel is provided on the cultivator for controlling the depth of operation. The cultivator may be fitted with 7, 9, 11, 13 tines or more depending upon the requirement (Fig.29).

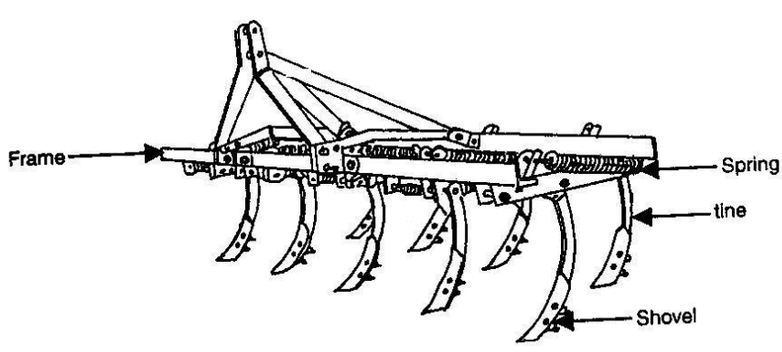

Fig. 29. Cultivator with spring loaded tines

10.7.2 Cultivator with rigid tines

Rigid tines of the cultivator are those tines which do not deflect during the work in the field. The tynes are bolted between angle braces, fastened to the main bars by sturdy clamps and bolts. Spacing of the tines are changed simply by slackening the bolts and sliding the braces to the desired position. Since rigid tines are mounted on the front and rear tool bars, the spacing between the tynes can be easily adjusted without getting the tines chocked with stubbles of the previous crop or weed growth. A pair of gauge wheel is used for controlling the depth of operation (Fig.30).

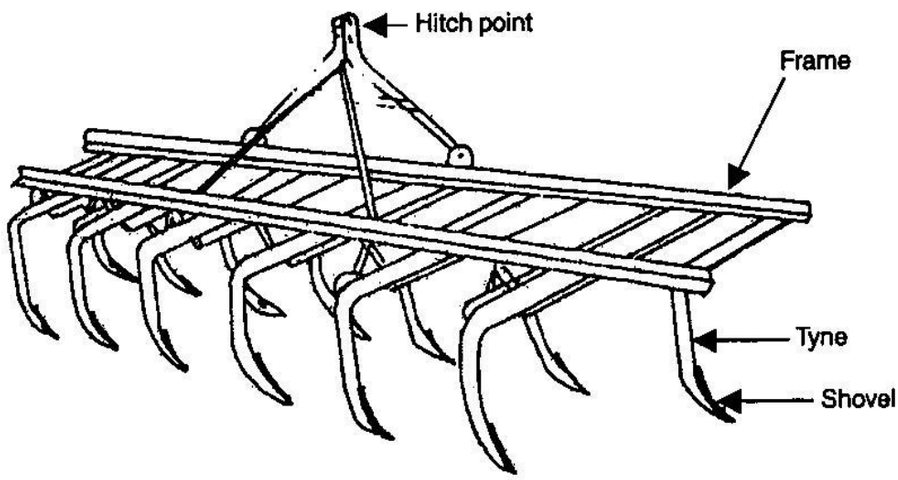

Fig.30. Cultivator with rigid tines

10.8 Puddlers

Puddling of soil is one of the most common farm operations in paddy growing areas. The most desirable soil conditions at the time of transplanting appears to be one having semi-pervious hard pan covered with approximately 10 to 15 cm dense mud and very little free water on the surface.It usually refers to the churning of soil in the presence of excess water by means of a puddler or any other implement for that purpose. Purpose of puddling is to reduce leaching of water, to kill weeds by decomposing and to facilitate the transplanting of paddy seedlings by making the soil softer. It is done in a standing water of 5 to 10 cm depth in the field, which has already received one ploughing by the mould board plough. In some areas, an indigeneous plough is used as a puddler by some farmers.

Puddlers are classified as: (i) hand operated puddlers, (ii) animal drawn puddlers, and (iii) tractor drawn puddlers. Among the various types, animal drawn puddlers are mostly used in the country. The indigenous plough and

peg tooth harrow are used for puddling in paddy growing areas. None of these implements are as effective as the rotating blade type puddlers.

The open blade type implement is commonly used for puddling in south India. It consists of series of steel or cast iron blades fastened to a cast iron hub at an angle. The number of cast iron hubs may be two or more. These hubs revolve on a steel shaft to which the wooden beam and the operator's seat are attached. Sometimes, these hubs form an integral part of the shaft which revolves either in wooden or metallic bearings at the ends in the frame. This type of implement is generally a walking type. The effective width of the puddler varies between 0.9 and 1.2 m (Fig.31).

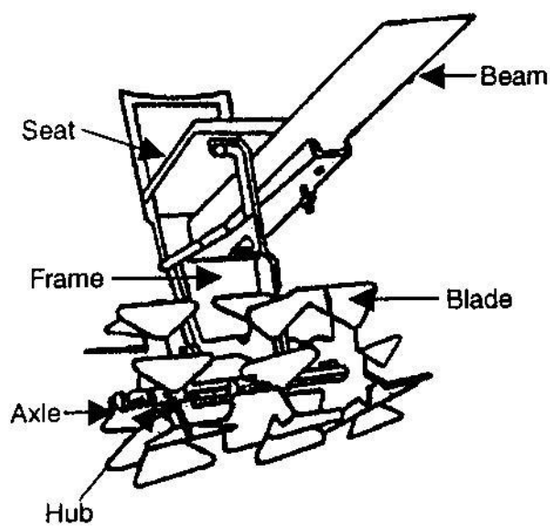

Fig.31. Open blade puddler

There are four classes of tractor drawn puddlers: (i) tine tiller, (ii) rotating blade puddler, (iii) disk harrow and (iv) power rotary tiller. Among these tractor drawn implements, disk harrow and power rotary tiller are in great use.

10.8.1 Cage wheel

It is a wheel or an attachment to a wheel with spaced cross bars for improving the traction of the tractor in a wet field. It is generally used in paddy fields.

10.8.2 Rotavator

It is an implement that cuts and pulverizes the soil by impact forces through a number of rotary times or knives mounted as a horizontal shaft. It is also called 'rotary tiller'. It is suitable for shallow cultivation and weed control. It consists of a power driven shaft on which knives or tines are mounted to cut

the soil and trash. Rotor has got several types of tines fitted on the shaft having a speed of 200-300 rpm. Generally, sharp edged L-shaped blades are used on the rotor. According to power used, rotavators are classified as animal-drawn, engine operated and tractor-drawn rotavators. One or two operations of this implement are sufficient for good pulverization of soil depending upon soil and crop conditions. It is not meant for sandy soil. The power from the engine to rotor shaft is transmitted through chain. A clutch is provided in transmission system for engaging and disengaging power. The speed of rotor is kept at about 350 rpm for rated rpm of 1500 of prune mover. The depth of penetration can be adjusted up to 12.5 cm. The suitable protective cover is provided at the rear to prevent under scattering of soil. It can cover about 1.5-2.0 ha/day. Bullock-drawn engine operated rotary tiller is quite useful for timely preparation of seedbed particularly in rice-wheat rotation. Power tiller operated rotary tillers are also quite useful for hilly areas and small hand holdings.

10.8.3 ANGRAU puddler

It is used for preparation of paddy fields with standing water (5-10 cm depth) after initial ploughing. It breaks up the clods and churns the soil. The main purpose of puddling is to reduce leaching of water and to kill weeds. Puddling facilitates transplanting of paddy seedlings. Puddler consists of puddling units each having four paddles (or blades) mounted on an axle, frame, beam, metal-cross and handle (Fig.32). Paddles are made of mild steel sheet having thickness of 3.15 mm. The blades are welded to the metal cross, made of mild steel rounds. The blades with the metal cross are welded to the axle, at an angle of 10° for 30” (750 mm) puddler and 7½° for 40” (1000 mm) puddler. While moving, blades (paddles) churn the soil and mix it properly. The weeds are also chopped and mixed with soil for decomposition. Two to three operations are good enough to get desired puddle soil. The animal-drawn puddler can cover 0.4-0.5 ha/day. According to the power used, puddlers are classified as hand operated, animal-drawn and tractor-drawn puddlers. Animal-drawn puddlers are commonly used in India.

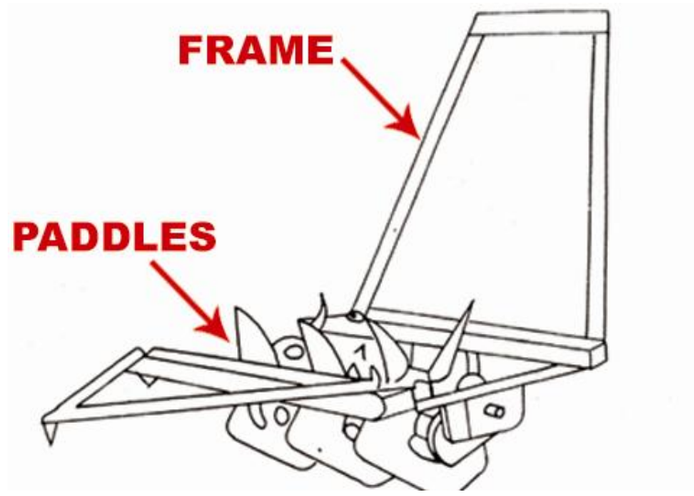

Fig. 32. ANGRAU Puddler

10.9 Intercultural implements

10.9.1 Hand hoe

Mechanical as well as chemical methods are being used to control the weeds during the cultivation of different crops. Number of mechanical tools is available but 'khurpa' is the most popular weeding tool amongst the small farmers in spite of its low work rate and uncomfortable operating posture. Different types of hand hoes are used in different parts of country depending upon the nature of soil and crop grown. The shape and size of hoe vary-from place to place. A few important hand hoes are khurpa, spade or kudali.

10.9.2 Paddy weeder

It is important equipment for inter-culture used in paddy cultivation. It is used for uprooting weeds and burying them in puddle soil between rows of standing paddy crop. It improves aeration of soil. It consists of frame, weeding roll, the tines, float and handle (Fig. 33). The frame is made of mild steel to which float, front and rear weeding rolls and angle regulator are attached. Weeding roll with fingerlike projections does the weeding operation in water. There are two weeding rolls one to front and other at rear and both are made of mild steel. Float, made of mild steel, is placed in front of weeding roll that helps in maintaining easy sliding motion during operation.

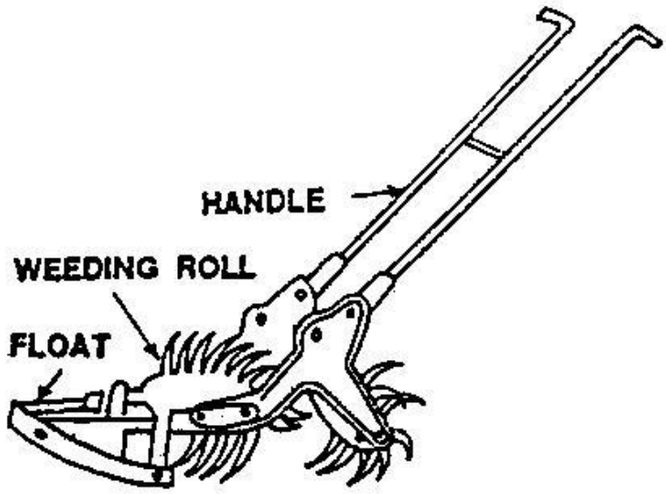

Fig. 33. Paddy weeder

10.9.3 Wheel hoe

It is a hoe with one or two wheels. Wheel hoe is used for intercultural operations in between the rows of crops. There is a wheel attached to the two handles, to which a working tool is attached. Wheel is helpful in guiding the tool and maintaining proper depth. It is useful for kitchen gardens.

Lecture No.11

Sowing equipment - seed cum fertilizer drills – types, functions, types of metering mechanisms, functional components, calibration. Paddy transplanters.

Seeding or sowing is an art of placing seeds in the soil to have good germination in the field.

Seed drill is a machine for placing the seeds in a continuous flow in furrows at uniform rate and at controlled depth with or without the arrangement of covering the seed with soil. Drills are used for sowing seeds in rows at 15-35 cm apart. The seed drill performs the following functions: (i) to carry the seeds, (ii) to open furrow to an uniform depth, (iii) to meter the seeds, (iv) to place the seed in furrows in an acceptable pattern, and (v) to cover the seeds and compact the soil around the seed.

Seed drills, fitted with fertilizer dropping attachment, distribute the fertilizer uniformly on the ground, is called seed cum fertilizer drills. It has a large seed box which is divided length wise into two compartments, one for seeds and another for fertilizers.

11.0 Components of seed drill

A seed drill with mechanical seed metering device mainly consists of: (i) frame, (ii) seed box, (iii) seed metering mechanism, (iv) furrow openers, (v) covering device, and (vi) transport wheels.

Frame. The frame is usually made angle iron with suitable braces and brackets. The frame is strong enough to withstand all types of loads inn working condition.

Seed box. It may be made of mild steel sheet or galvanized iron with a suitable cover. A small agitator is sometimes provided to prevent clogging of seeds.

Covering device. It is a device to refill a furrow after the seed has been placed in it. Covering the seeds are usually done by patta, chains, drags, packers, rollers and press wheels, designed in various sizes and shapes.

Transport wheel. There are two wheels fitted on the main axle. Some seed drills have got pneumatic wheels also. The wheels have suitable attachments to transmit power to operate seed dropping mechanism.

11.1 Seed metering mechanism

The mechanism of a seed drill or fertilizer distributor which deliver seeds or fertilizers from the hopper at selected rates is called Seed metering mechanism. Seed metering mechanism may be of several types: (i) fluted feed type, (ii) internal double run type, (iii) cup feed type, (iv) cell feed mechanism, (v) brush feed mechanism, (vi) auger feed mechanism, (vii) picker wheel mechanism, and (viii) star wheel mechanism.

Most common type of metering devices that delivers a more or less continuous flow of seeds is fluted roller type or internal double run type. These metering devices are driven by ground wheel. Some of above metering devices have not been commercially accepted and popularized.

11.1.1 Fluted feed type seed metering mechanism

The fluted wheel (also known as fluted roller) is driven by a square shaft. Fluted rollers are provided with longitudinal grooves along the outer periphery and can be shifted on the shaft sideways (Fig.34). The size of groove is different for different crops. The fluted rollers are mounted at the bottom of the seed box; receive the seeds into longitudinal grooves and pass on to the seed tube through the seed hole. By shifting the rollers sideways, the length of the groove exposed to the seed, can be increased or decreased and hence the amount of seed sown is changed. The number of rollers on a drill is the same as the number of furrow openers. There is also an adjustable gate on the discharge side of the fluted wheel. The gate opening can be changed to fit the size of the seed. Generally, the speed of the square shaft is constant, but on some drills, the speed of the shaft can also be changed, resulting in a change in the seed rate. The number of flutes on the roller ranges from 8 to 12. This method is favoured for sowing small or medium size seeds. For bold size seeds, this mechanism is not preferred as the seeds are likely to get crushed during metering operation.

Fluted roller is a simple, low cost, trouble free device suitable for bulk metering even for granulated fertilizers. An improved design of the fluted roller has spiral shaped flutes. This design offers a uniform distribution of seeds as compared to straight shaped flutes. However, most of the low cost animal drawn ferti- drills are fitted with straight shaped rollers. It is mostly used for drilling wheat. The fluted feed mechanism is more positive in its metering action than the *Internal double run* method.

11.1.2 Internal double run type seed metering mechanism

It has a double faced wheel; one face has a larger opening for the larger seeds and the other face or side has a smaller opening for use with smaller seeds. A gate is provided in the bottom of the box to cover the opening not in use. When one of the sides is being used, the seed is prevented from flowing through the other side by using a special cover. The discs mounted on a spindle and housing in a casing fitted below the seed box. The rate of seeding is varied by adjusting the speed of the spindle which carries the discs. This mechanism is used for metering bold and small seeds (Fig.35).

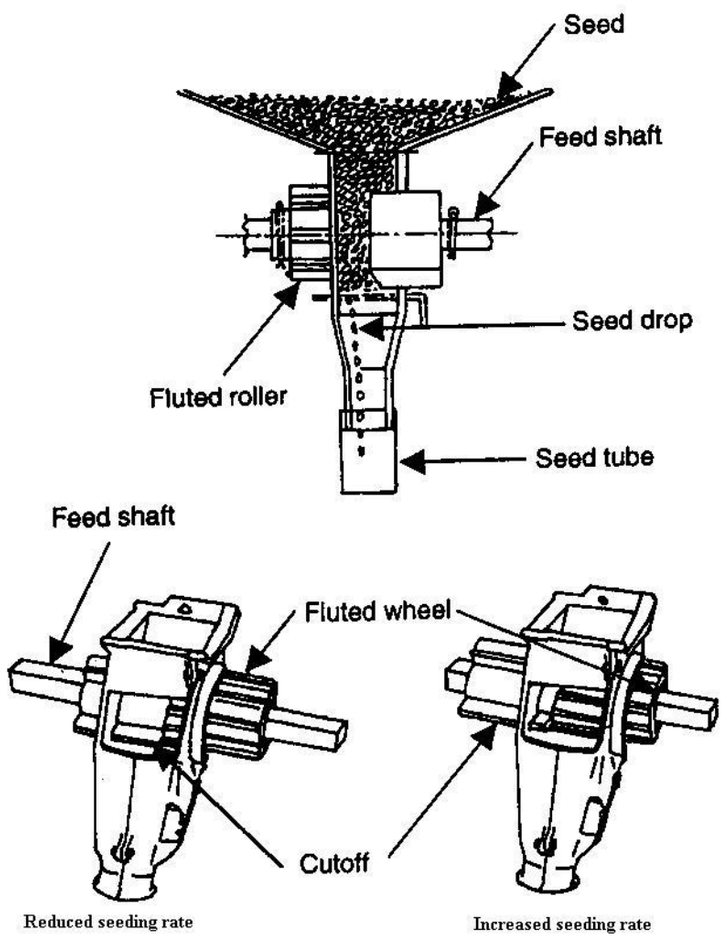

Fig. 34. Fluted roller seed metering mechanism

11.1.3 Cup feed seed metering mechanism

It is a mechanism consisting of cups of spoons on the periphery of a vertical rotating disc which picks up the seeds from the hopper and delivers them into the seed tubes. It consists of a seed hopper which has two parts. The upper one is called *Grain box* and the lower one is called *Feed box.* Shuttles are provided to connect these boxes. The seed delivery mechanism consists of a

spindle, carrying a number of discs with a ring of cups attached to the periphery of each disc. The spindle with its frame and attachment is called *Feed barrel.* When the spindle rotates, one disc with its set of cups rotates and picks up few seeds and drops them into small hoppers. The cups have two faces, one for larger seeds and other for smaller seeds. The seed rate is controlled by the size of the cups and the rate at which the seed barrel revolves. This type of mechanism is common on British seed drills (Fig.35).

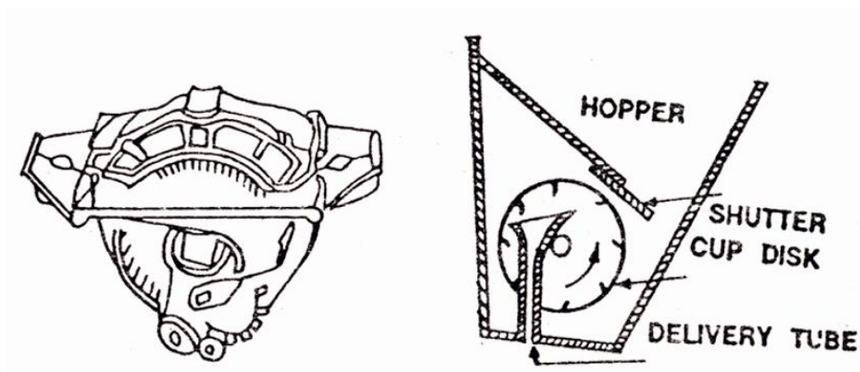

Internal double run **Cup feed mechanism**

Fig. 35. Seed metering mechanisms in seed drill

11.1.4 Cell feed seed metering mechanism

It is a mechanism in which seeds are collected and delivered by a series of equally spaced cells on the periphery of a circular plate or wheel.

11.1.5 Brush feed seed metering mechanism

It is a mechanism in which a rotating brush regulates the flow of seed from the hopper. A number of bullock drawn planters in the country have brush feed mechanism.

11.1.6 Auger feed seed metering mechanism

It is a distributing mechanism, consisting of an auger which causes a substance to flow evenly in the field, through an aperture at the base or on the side of the hopper. Many of the fertilizer drills of the country have got Auger feed mechanism.

11.1.7 Picker wheel seed metering mechanism

It is a mechanism in which a vertical plate is provided with radially projected arms, which drop the large seeds like potato in furrows with the help of suitable jaws.

11.1.8 Star wheel seed metering mechanism

It is a feed mechanism which consists of a toothed wheel, rotating in a horizontal plane and conveying the fertilizer through a feed gate below the star wheel.

11.2 Furrow openers

The furrow openers are provided in a seed drill to open up furrows before dropping the seeds, which facilitate the placement of seed and fertilizers at a desired uniform depth and spacing. Furrow openers play a very significant role in placing the seed and fertilizers at the moist zone of the soil. The seed tube conducts the seed from the feed mechanism into the boot from where they fall into the furrows.

11.2.1 Type of furrow openers

In general, two main types of furrow openers used with ferti-drills are: (i) rotating type openers i.e., single disc and double disc type, and (ii) fixed type openers i.e., shovel type and shoe type (Fig.36).

Shovel type furrow openers are widely used in seed drills. There are best suited for stony or root infested fields. These shovels are bolted to the flat iron shanks at the point where boots are fitted which carry the end of the seed tubes. In order to prevent shock loads due to obstructions, springs are provided. It is easy in construction, cheaper and easily repairable.

11.2.2 Shoe type furrow openers

It works well in trashy soils where the seed beds are not smoothly prepared. They are made from two flat pieces of steel welded together to form a cutting edge. It is specially suited for black cotton soil. Shoe is made of carbon steel having minimum carbon content of 0.5 percent with a minimum thickness of 4 mm.

11.2.3 Disc type furrow openers: They are of two types (Fig.36);

(a) Single disc type and (b) Double disc type.

(a) **Single disc type furrow openers**: Disc type furrow openers are found suitable where plant debris or trash mulches are used. It is a furrow opener consisting of one concave disc and set at an angle while operating, shifts the soil to one side making a small ridge. The disc is kept clean by two scrapers, one toe shaped at the convex side and one “T” shaped at the concave side.

The disc penetrates well in the soil, cuts all the trashes and clods in the field. It works in sticky soils also, but the discs are costly and maintenance work is bit difficult.

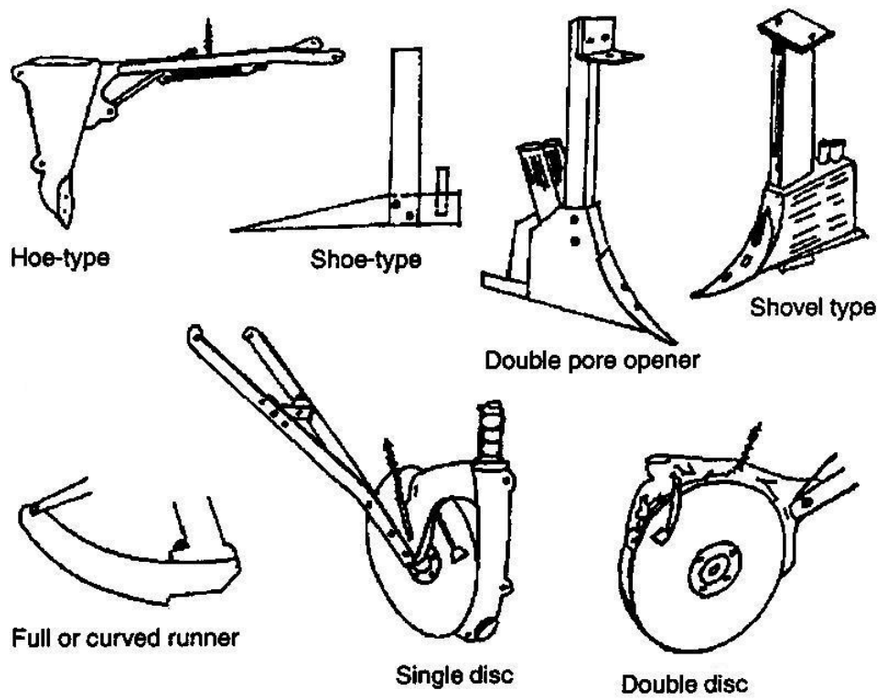

Fig. 36. Types of furrow openers

(b) **Double disc type furrow openers**: In double disc type furrow opener, there are two flat discs, set at an angle to each other. The discs open a clean furrow and leave a small ridge in the centre. The seeds are dropped between the two discs, providing a more accurate placement. It is suitable for the trashy lands. Seed drills attached with tractors having high speeds, usually have this type of furrow opener.

11.3 Calibration of seer drill and seed-cum-fertilizer drill

The procedure of testing the seed drill for correct seed rate is called calibration of seed drill. It is necessary to calibrate the seed drill before operating in the field to get a predetermined seed rate of the machine. The following steps are to be followed for calibration of seed drill or seed-cum-fertilizer drill.

Step 1: Determine the nominal width (W) of drill.

$$W = M \times S$$

Where M is the number of furrow openers and S is the spacing between the openers in metre and W is in metre.

Step 2: Find the length of a strip (L) having nominal width W necessary to cover 1/25th of a hectare.

$$L = \frac{10000}{W} \times \frac{1}{25} = \frac{400}{W} m$$

Step 3: Determine the number of revolutions (N) the ground wheel has to make to cover the length of the strip (L).

$$\pi \times D \times N = \frac{400}{W}$$

$$\therefore N = \frac{400}{\pi \times D \times W} \text{rpm}$$

Step 4: Raise the seed drill in such a way that the ground wheels turn freely. Make a mark on the drive wheel and a corresponding mark at a convenient place on the body of the drill to help in counting the revolutions of the drive wheel.

Step 5: Put selected seed and fertilizer in the respective hoppers. Place a sack or a container under each boot for seed and fertilizers.

Step 6: Set the rate control adjustment for the seed and the fertilizer for maximum drilling. Mark this position on the control for reference.

Step 7: Engage the clutch or on-off adjustment for the hoppers and rotate the drive wheel at the speed N.

$$N = \frac{400}{\pi \times D \times W} \text{ rpm}$$

Step 8: Weigh the quantity of seed and fertilizer, dropped from each opener and record on the data sheet.

Step 9: Calculate the seed and fertilizer, dropped in kg/ha and record on the data sheet.

Step 10: Repeat the process by suitable adjusting the rate control till desired rate of seed and fertilizer drop is obtained.

Problem 1: The following results were obtained while calibrating a seed drill. Calculate the seed rate per hectare.

No. of furrow openers – 8

Spacing between furrows – 15 cm

Diameter of drive wheel – 1.5 m

RPM of the drive wheel – 600

Seed collected – 25 kg.

Solution:

Effective width of seed drill = 8 ×15 = 120 cm = 1.2 m

Circumference of drive wheel = $\pi \times 1.5$ m

Area covered in one revolution = $\pi \times 1.5 \times 1.2$ =5.66 m^2

Area covered in 600 revolutions = 5.66 ×600 = 3396 m^2

Seed dropped for 3396 m^2 = 25 kg

Seed dropped/ha = $\frac{25 \times 10000}{3396}$ = 73.6 kg

Seed rate = 73.6 kg

Problem 2: Calculate the cost of seeding one hectare of land with bullock drawn seed drill of 5×30 cm size. The speed of bullocks is 3 kmph. Hire charges of bullocks is Rs. 100/- per pair, hire charges of seed drill is Rs.200/- per day and wage of operator is Rs.200/- per day of 8 hours.

Solution:

Width of seed drill = 5×30 = 150 cm = 1.5 m

Area covered per hr = width × speed = 1.5 ×3×1000 =4500 m^2 =0.45 ha

To cover 0.45 ha of area, one hour is required

To cover one ha of area, time requirement = $\frac{1}{0.45}$ = 2.22 hr

Time taken/ha = 2.22 hr

Cost of seeding/hr = $\frac{100 + 200 + 200}{8}$ = Rs. 62.50/-

Cost of seeding/ha = 62.5 ×2.22 = 138.75/-

Problem 3: A fluted feed seed drill has eight furrow openers of single disc type. The furrow openers are spaced 30 cm apart and the main drive wheel has a diameter of 110 cm. How many turns of main drive wheel would occur when the seed drill has covered one hectare of area.

Solution:

Circumference of drive wheel = $\pi \times 110$ = 345.7 cm

Total width of seed drill = 8 × 30 = 240 cm

Area covered per revolution = 345.7 × 240 = 82968 cm^2 = 8.29 m^2

Number of turns per ha = $\frac{10000}{8.29}$ = 1206.3

Problem 4: Maximum yield of maize is obtained with a population of 30,000 plants per hectare. The rows are 140 cm apart and an average emergence of 80% is expected. Find: (a) How many seeds per hill should be planted if hills are 140 cm apart? (b) What would be seed spacing if crop is drilled?

Solution:

Number of seeds per ha = $\frac{30000}{0.80}$ =37500

Area covered per hill = 140 × 140 = 19600 cm^2 = 1.96 m^2

No. of hills per ha = $\frac{10000}{1.96}$ = 5102

(a) No.of seeds per hill = $\frac{37500}{5102}$ = 7.35 rounded to 8

(b) Total length of row = $\frac{10000}{1.4}$ = 7142.85 m

Spacing of drilled seed = $\frac{7142.85}{37500}$ = 0.19 m =19 cm.

11.4 Rice transplanter

Two methods are used for raising rice cop in India, namely upland cultivation (direct seeding) and wetland cultivation (direct seeding and seedling transplanting). Rice transplanting by hand is very tedious, expensive and labour consuming operation. Many attempts have been made to develop manual as well as self-propelled rice transplanter for transplanting of rice seedlings in rice growing countries such as Japan, China, Korea and India. The manual rice transplanter consists of frame, movable tray and seed picking fingers (Fig.37). Mat type seedlings are placed in the inclined trays. Fingers pick up the seedlings when they are pushed downward and place them in the prepared soil. Plant-to-plant spacing can be controller by the operator. Transplanters are available in 5-6 rows with comb type fingers. It's working capacity varied from 0.3-0.4 ha/day and requires two persons, one for operating the transplanter and other for filling the tray with mat seedlings.

The self propelled rice transplanter consists of air-cooled gasolines engine, main clutch, running clutch, planting clutch, seeding table, float, star wheel, accelerator lever, ground wheel, and handle and linkage mechanism. Seedlings are grown in special seedling trays in controlled environment called mat seedlings. When seedlings are 25-30 day-old, they are uprooted and placed in slanting seedling trays. Power from the engine is transferred to main clutch from where it is transferred to planting and a running clutch. The

fingers on four bar linkage mechanism catch 3-4 seedlings at a time separate them from the mat and place it in the puddle soil. A float supports the machine on the water while working in the field. There are two end wheels that facilitate the movement of the transplanter. A marker is provided to demarcate the transplanting width during operation. The machine maintains row to row and plant to plant spacing. The planting capacity of the machine is about 0.05-0.1 ha/hr. These transplanters are now commercially available in India.

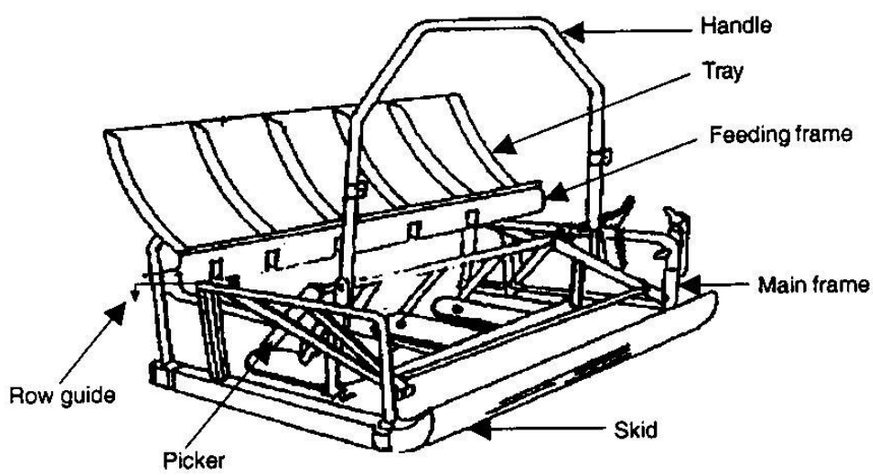

Fig. 37. Manual rice transplanter

Lecture No.12

Harvesting equipment – sickles, self propelled reaper, alignment and registration. Combines, functions of combines.

12.0 Harvesting plants

The operation of cutting a plant is achieved by four different actions. (1) slicing action with a sharp smooth edge, (2) tearing action with a rough, serrated edge, (3) high velocity single element impact with sharp or dull edge, and (4) a two element scissor type action. Generally, manual harvesting involves slicing and tearing actions that result in plant structure failure due to compression, tension or shear. The serrated sickle combines a slicing and a sawing action. Sickles with serrated edges do not require the repeated sharpening needed by smooth edge sickles.

Single element impact cutting is an economical method of cutting unrestrained vegetation and has been widely used in rotary lawn mowers, forage choppers, and some tractor mounted cutter bar. Usually a single element, sharp edged blade requires a velocity of about 10 m/second for impact cutting. A dull edged, single element blade requires a velocity of about 45 m/second.

The two element scissors action is the most widely used for harvesting agricultural crops. The reciprocating cutter bars that are commonly used for harvesting paddy/wheat use this principle. The inclined angle between the cutting edges is about 38 degrees. The serrated blades permit a larger inclined angle because the plants can not easily slip between the two cutting edges. Reciprocating cutter bars do an excellent job of harvesting but are characterized by the high energy, losses, short dynamic imbalance, and restricted operating speeds. Improvements have been relatively limited by the high inertial and frictional forces involved in this type of mechanism.

12.1 Sickle

It is a simple harvesting tool. It is used for harvesting crops and cutting other vegetations (Fig.38). It is essentially consists of a metallic blade and a wooden handle. Blade is the main metallic part of the sickle. It is desirable to make the blade of carbon steel. It is made in a curved shape. The tooth of serrated sickle is made sharp for efficient working in the field. The handle of the sickle is made of well seasoned wood. The forged end of the blade for fixing the handle is called tang. The plain or serrated edge in the inner side of

the blade is called cutting edge. Protective metallic bush fitted at the junction of the blade and the handle to keep the tang tight in the handle is called ferrule. Harvesting by sickle is very slow and labour consuming device.

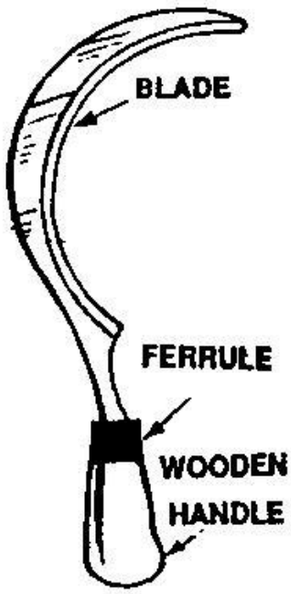

Sickle

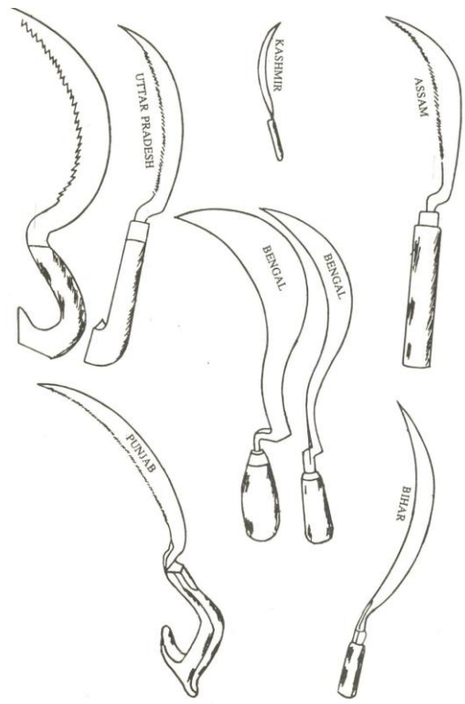

Indian sickles

Fig. 38. Various types of sickles

12.2 Mower

Mower is a machine to cut herbage crops and leave them in swath. The conventional mower has the following main parts (Fig.39):

a) Frame to support moving parts

b) Power transmitting unit to receive and transmit motive force

c) Cutter bar to cut crops and separate it from uncut portion.

d) Wheels for transport and for operating the cutting mechanism

e) Auxiliary parts to lift and drop the cutter bar

Frame

The frame of the mower is a heavy casting which supports other parts and provides openings for main axle, countershaft and crankshaft. It also provides space for gears, clutch and bearings. The lever for lifting the cutter bar is attached to the frame.

Power transmitting unit

In bullock drawn mowers, the power transmitting unit consists of main axle, gears, crankshaft, crank wheel and pitman. The main axle receives power from one of the transporting wheels. A spur gear mounted on the main axle drives the spur pinion on one end of the countershaft in the gear box. The crank wheel and the pitman are fixed on the outer end of the crankshaft. The reciprocating (back and forth) motion is transmitted to the pitman, which in turns operates the knife in the cutter bar. The knife is connected to the pitman with a ball and socket joint. The knife makes about 1600 cutting strokes per minute. In order to engage or disengage the driving unit, generally a dog clutch is provided on the counter shaft so that the man can operate it by foot from the seat.

The tractor drawn semi-mounted or mounted type mowers are operated by the P.T.O. shaft. In this case, the cutting mechanism is driven independently of the forward speed of the mower. A shaft is connected with the PTO shaft, which drives a V pulley with the help of a universal joint. The V pulley rotates another smaller pulley on the crank shaft of the machine and reciprocating motion is transmitted to the cutter bar. Other basic components of the machine are the same as that of bullock drawn mower with some variations in size and minor accessories.

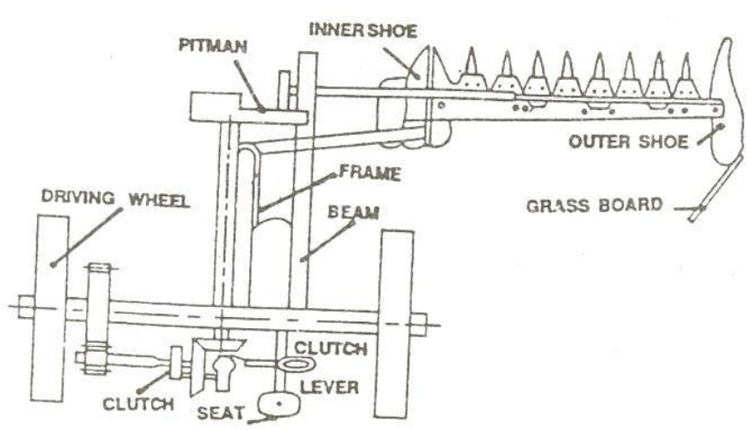

Fig.39 . Components of reciprocating type mower

Cutter bar

It is an assembly comprising of fingers, knife section, ledger plate, wearing plate, knife guides (clips) and shoes (Fig.40). It is used for cutting grasses and forage. It is made of high grade steel. It works like a knife. The knife is a metal bar, on which triangular shaped sections are mounted. The cutting edges of these knife sections are mostly smooth edges. The knife sections

move back and forth and cut plants in both directions. The section of knife should always stop at the centre of the guard on each stroke. The length of the stroke is 7.5 cm. Ledger plate is a hardened metal, inserted in a finger over which knife sections move to give a scissor like cutting action. Knife clips hold the knife sections down against ledger plates but allow it to move freely. Knife clips are placed together with wearing plates to absorb the rearward thrust of the crop to the knife. Wearing plate is a hardened steel plate, attached to the finger bar to form a bearing surface for the back of the knife. A badly worn wearing plate or a loose knife clip may allow the knife to bend.

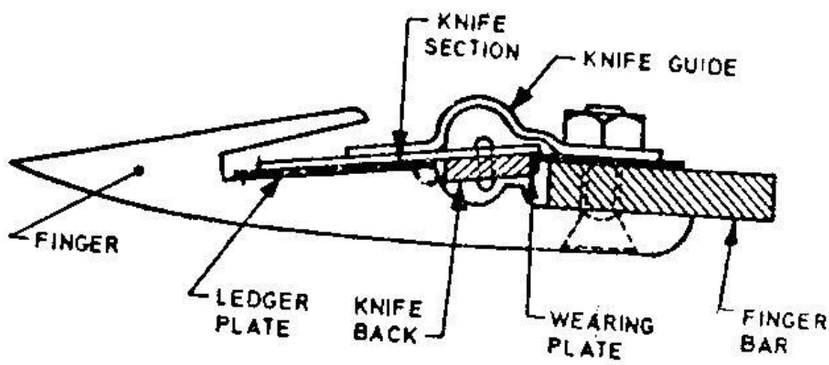

Fig. 40. Components of cutter bar

Pitman is a type of connecting rod which is pinned to the crankshaft with the help of a pin. It transmits reciprocating motion to a knife head. Wooden pitman is commonly used for the mowers.

A shoe is always provided on each end of the cutter bar to regulate the height of cut above the ground. The inner shoe is larger in section and is placed at the inner end of the cutter bar. The outer shoe is placed at the outer end and is smaller in section. The inner shoe has a larger area of contact with the ground than the outer one. This results in smooth and easy sliding of the cutter bar on the ground. Grass board is provided at the outer end of the mower, which causes the cut plants to fall towards the cut material. The angle of the grass board can be changed for different crops.

Wheels

Early imported mowers had a pair of wheels made of cast iron with sufficient width and number of lugs to develop better grip in the soil. Now pneumatic wheels have been introduced. Because of the ratchet and pawl arrangements, the transport wheels transmit power to the knife.

Auxiliary parts

There is a lever provided within the easy reach of the operator to enable him to lift the cutter bar from his seat. In addition to this, all animal drawn mowers are provided with a foot lift so that the cutter bar can be raised when turning at corners or to avoid obstructions. A hand lever is also provided to adjust the height of the cut.

Registration and Alignment

As the pitman arm moves the knife back and forth, the centre of the knife section must stop in the centre of the guard on each stroke, when it is in operating condition (Fig.41). This is called **registration**. It is essential for an even job of cutting, and unclogging of the cutter bar. Adjustment is commonly made by moving the entire cutter bar in or out with respect to the pitman.

On most of the mowers, the outer end of the cutter bar is carried a little ahead of the inner end to overcome the pressure exerted by the standing crop on the cutter bar, while it is under working condition. In general, the cutter bar is set at about 88° to the direction of motion, i.e., inward lead of 2°. This is called **lead** and gives better cutting. When the cutter bar is properly aligned, the knife and pitman run in a straight line. The lead can be measured by stretching a string parallel to the pitman up to the outer end. Generally, 2 cm lead per metre length of cutter bar is adequate.

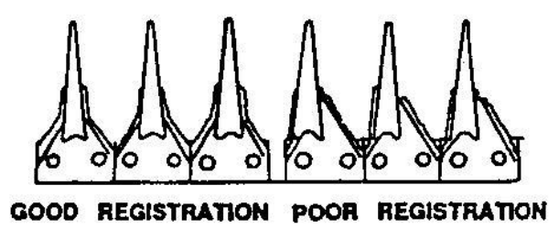

Fig. 41. Registration of mower

12.3 Combine harvester

Combine harvester is a machine designed for harvesting, threshing, cleaning and collecting the grain while it moves over the land. All the five operations are carried out in single operation of the harvester. The machine is versatile and with minor adjustments can handle a variety of crops. The size of the combine is indicated by the width of cut, it covers in the field.

Combine harvester in its primitive form was introduced in Germany and U.S.A. in late 19th century and became popular in next decades. In India,

though a few tractor drawn combine harvesters manufactured by Minneapolis Moline U.S.A, and self-propelled Russian combine harvesters were available with some Govt. farms and landlords. However, between 1970-73 introduction of E512 GDR combine in Punjab, Haryana and M.P. was made in a big way. This was another revolution in the farm mechanization sector. Gradually indigenous production started with the manufacture of a Swaraj 8100 combine harvester in organized sector by M/s Punjab Tractors Ltd., which followed manufacturing of the machine in small sector in a small way.

Surprisingly in 30 years of its production on commercial scale in India there are 60 more manufacturers with a production capacity of 5 to 150 combines per year. On an average about 800 combines are added every year on Indian farms. All these manufacturing units are located in the state of Punjab.

12.3.1 Functions of combine harvester

1. cutting the standing crops
2. Feeding the cut crops to threshing unit
3. Threshing the crops
4. Cleaning the grains from straw
5. Collecting the grains in a container

Lecture No.13

Plant protection equipment – types of sprayers, constructional features of knapsack sprayer, hand compression sprayer, foot sprayer, rocker sprayer and power sprayer, care and maintenance of sprayers.

13.0 Sprayers

Insect pests and weeds cause considerable damage to the commercial crops. If not controlled in time, the entire crop gets lost and, therefore, farmers are likely to suffer in many ways. Among the important methods of weed control and plant protection systems, the following methods have been recognized as the effective and economical ones under different situations:

a) Mechanical control

b) Chemical control

c) Biological control

d) Agronomical methods

e) Bio-physical methods

f) Fire as control

The mechanical control of weeds is most widely used in India and in many developing countries due to the availability of farm labour at relatively low rates of wages. Whereas, the chemical method of plant protection has been universally accepted due to saving of time, labour and its effectiveness with relatively low expenditure. In developing countries, combination of chemical and mechanical methods of weed control has been successfully accepted. The chemicals for protecting the plants from various injurious or organisms need to be applied on plant surfaces in the form of sprays, dusts, mist etc. Sprayers and dusters are available in many forms for this purpose.

13.1 Sprayers

Sprayer is a machine to apply fluids in the form of droplets. Sprayer is used for the following purpose: (i) application of fungicides to minimize fungal diseases, (ii) application of insecticides to control insect pests, (iii) application of herbicides to remove weeds and (iv) application of micronutrients on the plants. The main functions of sprayer are: (i) to break the liquid into droplets of effective size, (ii) to distribute them uniformly over the plants, and (iii) to regulate the amount of liquid to avoid excessive application

13.2 Desirable quality of sprayer

(a) The sprayer should produce a steady stream of spray materials in the desired fineness of the particle so that the plants to be treated may be covered uniformly.

(b) It should deliver the liquid at sufficient pressure so that it reaches all the foliage and spreads uniformly over the surface of the plant

(c) It should be light weight, sufficiently strong, easily workable and repairable.

13.3 Sprayer's classification

Based on **power source**, sprayers may be classified as:

(i) Hand operated machines – suitable for small holdings. They are operated at pressure ranging from 1 to 7 kg/cm^2.

(ii) Power operated machines – suitable for treating a large area. They are operated at pressure ranging from 20 to 55 kg/cm^2.

(iii) Air planes – suitable for large scale work.

Based on **spray volume**, sprayers may be classified as:

(i) High volume sprayer - More than 400 litres of spray liquid per hectare is used.

(ii) Low volume sprayer – Spray volume ranges between 5 to 400 litres per hectare is used.

(iii) Ultra-Low volume sprayer – Spray volume less than 5 litres per hectare is used.

Based on **working principle**, sprayers may be classified as:

(i) Hydraulic energy sprayers

(ii) Compression sprayers

13.4 Hydraulic energy sprayers

In this category of sprayers, hydraulic pressure is thrust upon the liquid by the hand operated pumps. As a result, the liquid is forced through the nozzle in the form of a spray of droplets (diameter in the range of 300-400mμ). Sprayers of this type are high volume, high pressure and suitable for complete coverage of both ground and field crops.

13.4.1 Bucket type sprayer

It consists of a hand operated single or double acting pump (Fig.42), which may be placed into any ordinary bucket containing spraying solution. Plunger rod is hollow and serves as the compression chamber. Liquid is discharged in both suction and delivery strokes, hence a continuous application can be made. One hand operates plunger, while another hand keeps the pump in stable position. This pump is mostly made of brass. It is very light and easily handled and develops sufficient pressure to spray small gardens and low trees. It develops a pressure of 4 -10 kg/cm^2.

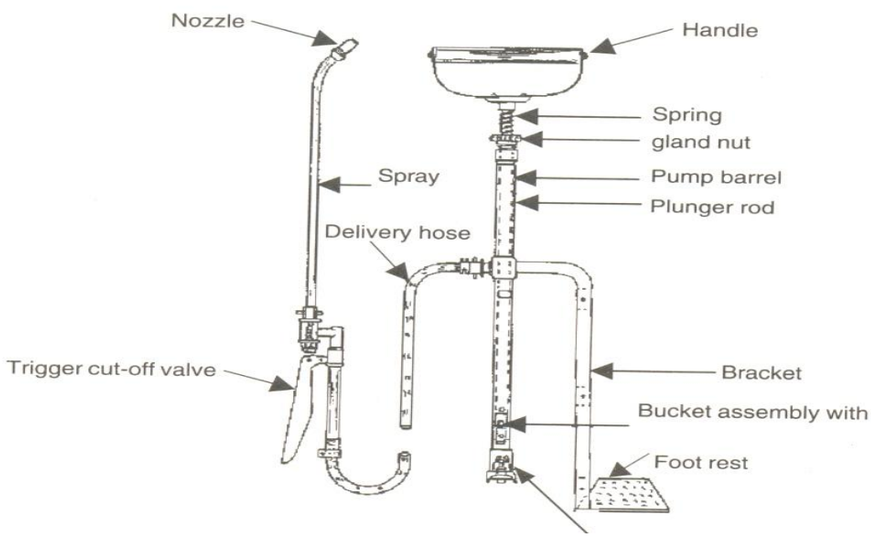

Fig. 42. Line diagram of bucket type sprayer

13.4.2 Knapsack sprayer

It is very common type of sprayer, is provided with a pump and a large air chamber permanently mounted in a 9 to 22.5 lts tank. The handle of the pump extending over the shoulder or under the arm of operator, which makes it possible to pump with one hand and spray with other hand. Spray liquid is delivered through the delivery system, consisting of lance and nozzle, which is connected with the pump by a flexible hose. A uniform pressure can be maintained by keeping the pump in operation. It is generally carried on the back of the operator. It is quite useful for spraying small trees, shrubs and row crops up to 2.5 m height. These sprayers are useful because of their simplicity in operation, durability and for diverse use including spraying bushes of tea and coffee (Fig.43).

One man can spray about 0.4 – 0.5 ha in a day, thus spraying about 90 lts of spray liquid. A pressure of 3 -5 kg/cm^2 is maintained in the pressure chamber.

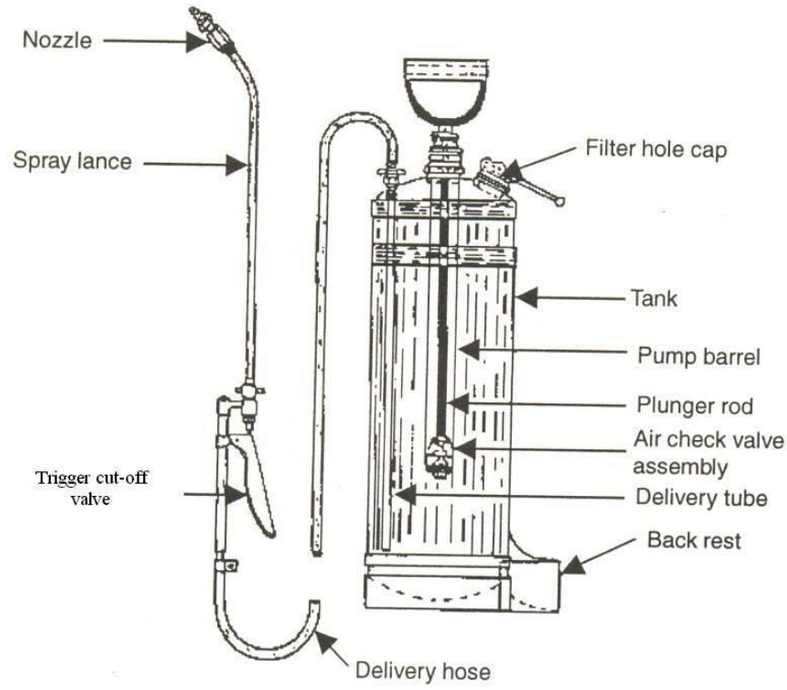

Fig. 43. Line diagram of knapsack sprayer

13.4.3 Foot - operated sprayer

It is also called pedal pump (Fig.44). It consists of a plunger assembly, stand, suction hose, delivery hose and an extension rod with nozzle. One end of suction hose is fitted with a strainer and other end with a flexible coupling. Similarly, one end of delivery hose is fitted with a cut-off valve and other end with a flexible coupling. An additional container is required to hold spray fluid, as this sprayer does not have a built-in tank. Continuous pedaling is required for uniform spray. It can develop a pressure of 17-21 kg/cm^2. It is easy to operate and can be used for spraying tall crops and fruit trees up to 4 m height. Sprayer can be used to spray trees up to 6 m height with additional hose.

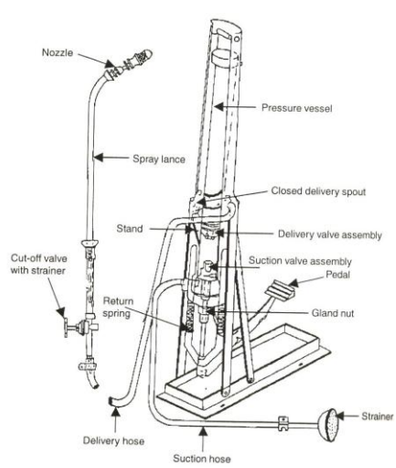

Fig. 44. Line diagram of foot operated sprayer

13.4.5 Rocking sprayer

This type of sprayer consists of a lever operated pump assembly which rests on a wooden platform (Fig.45). Suction hose with a strainer is immersed in a separate container containing the spray liquid. Delivery system consists of a separate pressure chamber, a flexible hose, spray lance, and a spray nozzle. The lever attached to the pump is operated by the rocking- forward and backward movement of the handle. Pressure is developed in the pressure chamber, which may attain pressure of 14-18 kg/cm^2. Such sprayers are used for spraying tall plants like coconut and arecanut trees, and sugar cane plants. Uniform spraying can be done if sufficient pressure is maintained in the pressure chamber. It needs two persons to operate the sprayer, one for operating the pumping system and another for the application of spray liquid.

13.5 Compression Sprayers

In these types of sprayers, air is compressed into the container by the compression air pump. When sufficient pressure is developed, then the delivery system is operated to obtain spray in the form of fine droplets. The compressed air forces the liquid through the nozzle and the desired type of spray is achieved. For this purpose, the tank is usually filled to three fourths of its capacity, leaving one-fourth volume for the compressed air. The air pump is fitted vertically inside the container which acts as a force pump.

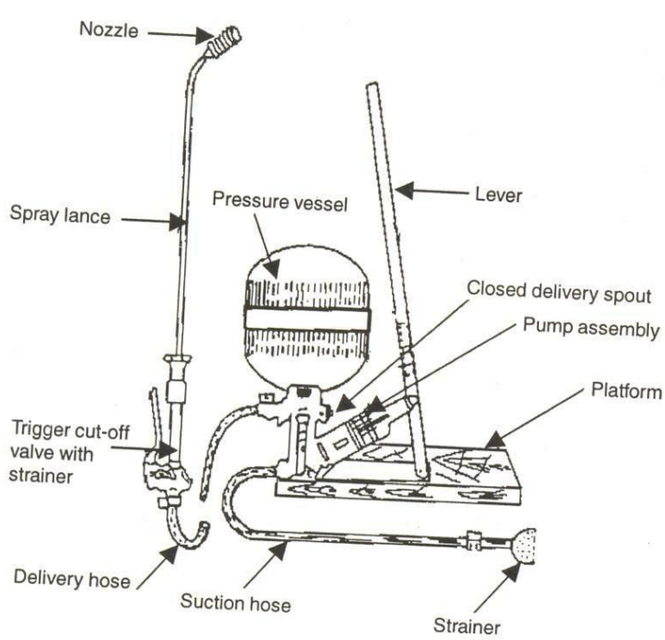

Fig. 45. Line diagram of rocking sprayer

13.5.1 Hand compression sprayer

The compressed air sprayer consists of an air pump, is fitted vertically inside the airtight chamber. The outlet pipe is suspended in the liquid in the chamber, the end running into the bottom of the chamber, the other end is provided with a nozzle. The chamber is usually filled to three fourths of its capacity, leaving one-fourth volume for the compressed air. Before spraying, the pressure is developed by pumping air into the chamber and continued till sufficient pressure is built. When sufficient pressure is developed, then the delivery system is operated to obtain spray in the form of fine droplets. The tank capacity is usually 14 lts. Frequent pumping must be done to maintain the required pressure.

13.5.2 Hand atomizer

This is the smallest type of hand sprayer used to treat the plants in home garden or nursery and to apply fly spray in the house.

13.6 Power sprayers

Power sprayers are operated usually with IC engines. The prime mower capacity varies from 1 to 5 hp. The pressure pump is operated by a small power unit ensuring a constant steady pressure. These sprayers are essentially high volume sprayers and operated at pressure ranges from 20 to 55 kg/cm^2. These machines are usually portable type. Sometimes, power sprayers are operated by the PTO shaft of the tractor. Power sprayers can cover much larger area, and do the job efficiently.

A power sprayer essentially consists of: (i) prime mower, (ii) tank, (iii) agitator, (iv) air chamber, (v) pressure gauge, (vi) pressure regulator, (vii) strainer, (viii) boom and (ix) nozzles (Fig.46).

Prime mower: Prime mower is needed to supply power to the power sprayer. It is usually internal combustion engine. The power generally varies from 1 to 5 HP.

Tank: Steel tank is widely used to prevent corrosion. Plastic tanks are also getting popular due to freedom from corrosion and ease of moulding into smooth shape. A covered opening, fitted with a removable strainer is provided for easy filling, inspection and cleaning. A drain plug is provided at the bottom of tank for draining the liquid.

Agitator: Agitators are needed to agitate the liquid in the tank. Propeller or paddle type mechanical agitators are provided to agitate the liquid. Horizontal shaft with flat blades rotating at about 100 to 200 rpm may be used. Paddle tip speed in excess of 2.5 m/s may cause foaming.

Air chamber: An air chamber is provided on the discharge line of the pump to level out the pulsations of the pump thereby providing a constant nozzle pressure,

Pressure gauge: It is provided on the discharge line to guide the operator regarding spray pressure. It should be under specified limit.

Strainer: It is provided in the suction line between the tank and the pump to remove dust, dirt and other foreign materials.

Boom: It is driven by a tractor, has a long boom in a horizontal plane on which nozzles are fixed at specified spacing. The boom can be adjusted vertically to suit the height of plants in different fields.

Nozzle: It is used to break the liquid into the desired spray and deliver it to plants.

13.6.1 Care and maintenance of sprayer

(i) All washers and packings should be soaked in oil or water before use.

(ii) The ends of the nozzle should be unscrewed and cleaned before starting the work.

(iii) When spraying is over, the sprayer should be operated for sometime with clean water to remove sediments from the pressure vessel and the discharge tube.

(iv) Special attention has to be paid in case of power sprayers for the following:

(a) Lubricating oil of the engine should be changed for every 100 working hours unless otherwise advised by the manufacturers.

(b) Do not disturb the packing until a leak is observed.

(c) The spray pump should not be worked at more than recommended pressure.

(d) Oil level in the pump of the engine should be checked every time and all grease points should be greased once in a day.

(e) Recommended oils and fuels should always be used in the engine.

(f) Nozzle should be thoroughly cleaned after use by blowing air through it.

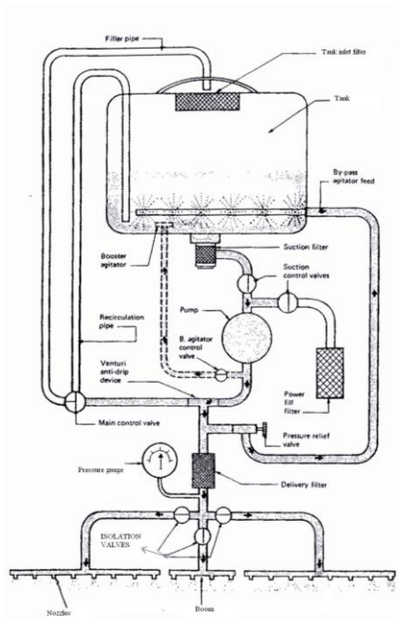

Fig. 46. Line diagram of power sprayer

Lecture No.14

Dusters – hand rotary and power operated dusters, care and maintenance of dusters.

Duster is a machine to apply chemical in dust form. Dusters make use of air streams to carry pesticides in finely divided dry form on the plants. A duster essentially consists of: (a) hopper, (b) agitator, (c) feed control, (d) fan or blower and (e) delivery nozzle.

14.0 Types of dusters

14.1 Plunger type hand duster

This machine consists of a chamber for the dust, outlet, a cylinder with piston, piston rod and handle. Sometimes the dust chamber is placed below the cylinder. By moving the piston back and forth in the cylinder, dust is forced through the outlet. This type of duster is suitable for dusting a small area.

14.2 Rotary type hand duster

This type of duster (Fig.47) is provided with an enclosed fan geared to a hand crank and a hopper holding the dust. It is equipped with an agitator to stir the dust and a regulator to control the discharge opening. The duster is usually fastened to the operator by means of shoulder strips. The right hand is used for cranking and the left hand to guide the discharge tube. These dusters can hold about 3.6 to 4.5 kg of dust and are large enough to treat 0.4 to 0.6 hectare of cropped area in a day. Ordinarily they are not found suitable for dusting over 3 meters height.

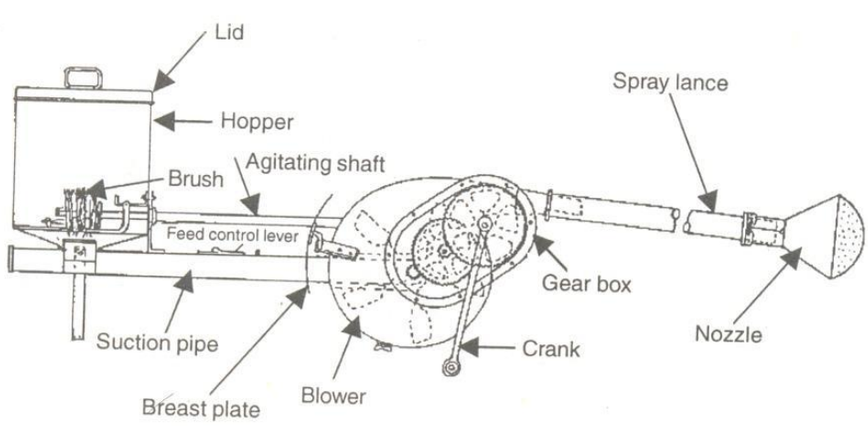

Fig.47. Line diagram of rotary duster

14.3 Power duster

The power duster of small capacity is generally mounted on the back of the operator. It consists of cylindrical container, blower, high speed engine and discharge hose pipe. The cylindrical container is provided with two compartments, one for gasoline, and the other for the powder to be dusted. The blower is directly mounted on the crankshaft of the high speed (4000 rpm) air cooled engine. The air pressure is utilized to agitate the dust in the container in order to blow it through the flexible hose pipe. The direction of the dust is regulated by a movable delivery spout suitably fitted with the unit. The dust can be blown up to about 6 meters height. Such a duster can cover about a hectare in a day. This type of duster can be converted into a sprayer with little modifications. Portable type power dusters are also in use. They are mounted on two wheel trolleys.

14.4 Care and maintenance of dusters

(i) Duster should be thoroughly cleaned before and after use with a suitable brush.

(ii) The hopper should be filled with dust about half of its capacity.

(iii) The lid of the hopper should be closed during the operation.

(iv) In rotary dusters, the handle should be cranked at 30 to 35 rpm for efficient performance.

(v) Before and after use of the duster, the dust from the fan box, suction pipe and hopper should be thoroughly blown out.

(vi) Pieces of paper, gunny bag and other foreign materials should be prevented from getting into the hopper.

(vii) The agitator parts and dust feed should be occasionally checked for blockage by foreign matter.

Lecture No.15

Tractor mounted equipments for land development and soil conservation – functions of bund former, ridger, and leveling blade.

15.0 Bund Former

It is used for making bunds or ridges by collecting the soil (Fig.48). Bunds are required to hold water in the soil, thereby conserve moisture and prevent runoff. The size of the bund former is determined by measuring the maximum horizontal distance between the two rear ends of the forming boards. It is operated by both animal and tractor. Bund former consists of: (i) forming board, (ii) beam and (iii) handle. Forming board is made of mild steel of thickness 1.6 mm for light soil and 2 mm for medium and heavy soils.

15.1 Ridger

It is an implement (Fig.49) which cuts and turns the soil in two opposite directions simultaneously for forming ridges. It is also known as furrower. Ridger is used to form ridges, for sowing row crop seeds and plants in well tilted soil. The ridger is also used for forming field channels or furrowers, earthing up and similar other operations. Ridgers are also known as riding plough and double mould board plough.

A ridger consists of beam, clevis, frog, handle, mould boards, braces, share, and sliding shoe. The ridger generally has V-shaped or wedge shaped share, fitted to the frog. The nose or the tip of the share penetrates into the soil and breaks the earth. The mould boards lift, invert and cast aside the soil, forming deep channels and ridges of the required size.

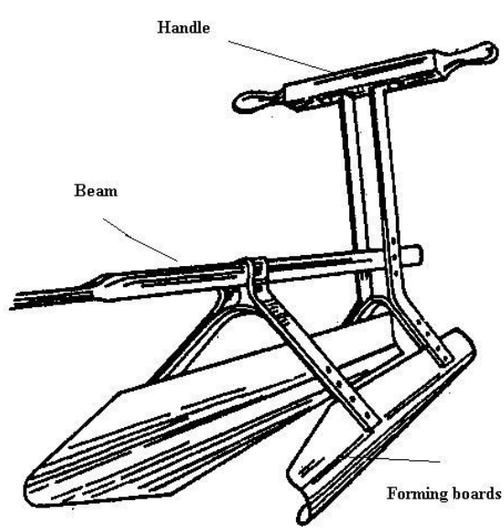

Fig. 48. Bund former

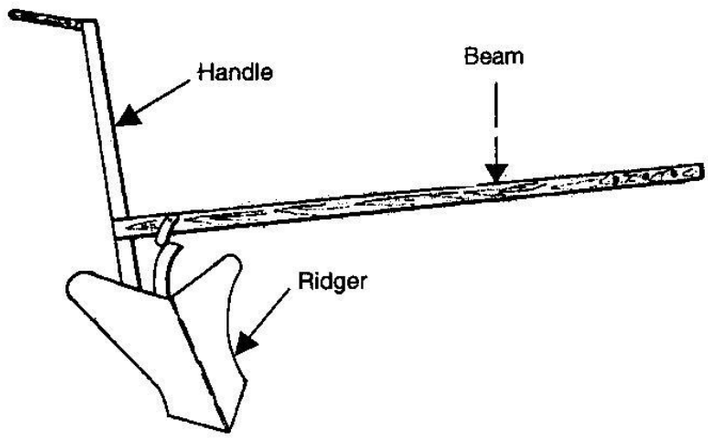

Fig. 49. Ridger

15.2 Leveller

In irrigated areas, land leveling is an essential operation for farming. Level fields receive uniform penetration of irrigation water with high efficiency. The possibility of water logging and soil erosion is reduced considerably. Land leveling is usually done in the slack season when the field is free from crops.

Wooden logs or planks are the most common type of field levelers used by farmers. They are operated in ploughed land to collect loose soil from high spots and dump it into depressions. The other improved type of land leveler which is used on the large farms, is called the leveling *karaha* (scoop) or scraper.

15.3 Animal drawn soil scoop

Soil scoop is used in excavating ditches, cleaning drains and moving soil over short distances (Fig.50). The implement is pulled by a pair of bullocks. Two men are needed to operate it. One man controls the bullocks and the other man does the loading and unloading. It consists of: (i) blade, (ii) soil trough, (iii) Hitching loop and (iv) handle.

Blade: It is made of high carbon steel with carbon content varying from 0.5 to 0.6%. The angle of the cutting blade varies from 12 to 15^0 only. The blade is riveted or bolted to the soil trough.

Soil trough: It is made of mild steel sheet. It has two handles on the sides at the rear end.

Hitching loop: Two ends of the loop are fitted to the side of the soil trough. The loop is made of mild steel round.

Handle: Two handles, are usually made of timber or mild steel flat.

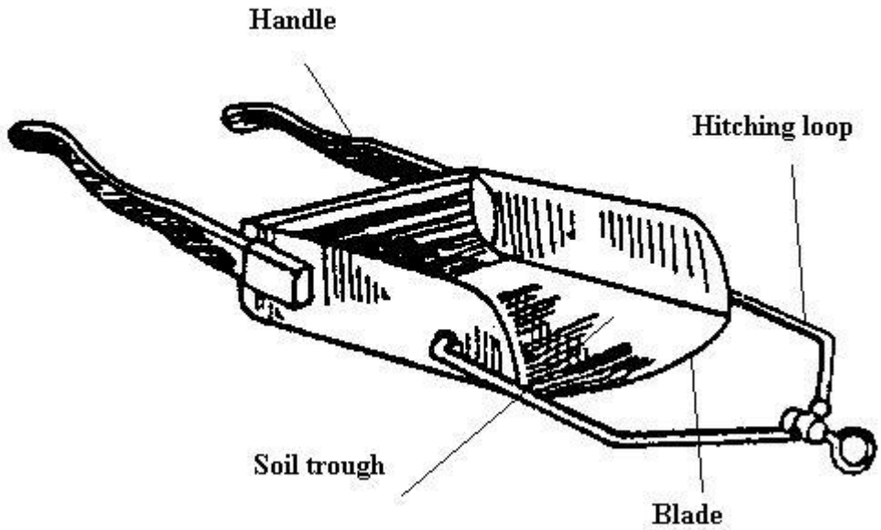

Fig. 50. Soil scoop

Lecture No.16

Farm mechanization – engineering intervention for production and productivity, percentage share of different power sources, level of mechanization of different operations (power sources).

16.0 Scope of mechanization

Agriculture is the most important sector of the Indian economy. Most of the farming is carried out on small holdings. About 78% of farm holdings belongs to small and marginal farmers, about 22% belongs to semi, medium and large farm holders. Moreover, the Indian farmers have the **lowest earnings per capita** because of the low yield per hectare from their holdings. Food grain production is almost stagnant (2001-2002: 212.85 million tones; 2006-2007:211.78 million tones). Whereas, population statistics shows that, India population was **1.065 billion** in July 2004, at present **1.128 billion** and projected population is **2 billion by 2101**. Mechanization is the only solution for increasing farm production per hectare to enable us to meet the food requirement of growing population. There is a positive correlation between application of improved technologies and the land productivity. The effective mechanization contributes to increase production in two major ways: the timeliness of operation and good quality of work

The requirement of power for certain operations like seed bed preparation, cultivation and harvesting becomes so great that the existing human and animal power in the country appears to be inadequate. As a result, the operations are either partially done or sometimes completely neglected, resulting in low yield due to poor growth or untimely harvesting or both. Yet Indian agriculture lacks farm power which needs to be increased from 1.25 kW/ha to at least 2.0 kW/ha. Draft animals and farm workers are important sources of farm power. Mechanization possibility is strongly influenced by: (i) farm size, (ii) cost of farm labour, and (iii) availability of suitable machines. The farming system continues to utilize manual labour, animal power and tractor based technology in almost all operations.

The economic progress of a nation depends directly upon availability of energy and its consumption for fruitful utilization. Increased energy input in agriculture directly or indirectly increases the production of crops. In order to bring more land under cultivation and to improve productivity, it is necessary to introduce other sources of power like tractors, power tillers, oil engines, self propelled combine harvester, electric motors and renewable energy

(specially wind mills for water pumping). The availability of power from different sources has been given in Table 2.

Table 1: Availability of farm power in India

Year	Total power, kW/ha	Sources wise, %		
		Animate power (Human + animal)	Mechanical	Electrical
1951	0.25	97.4	2.1	0.5
1961	0.31	94.9	3.7	1.4
1971	0.36	79.2	16.3	4.5
1981	0.63	48.2	32.3	19.5
1991	0.92	34.5	34.7	30.8
1999 (Estimated)	1.25	21.0	44.2	34.8

Mechanization in India may have to be done at various levels. Broadly, it can be done in three different ways:

1. By introducing the improved agricultural implements on small size holdings to be operated by bullocks;
2. By introducing the small tractors, tractor-drawn machines and power tillers on medium size holdings to supplement existing sources;
3. By introducing the large size tractors and machines on the remaining holdings to supplement animal power source.

These machines will be helpful in providing power efficiently for good seedbed preparation which is quite essential for maximizing the germination of the seed. In addition to this, the mechanization of the following fields of agriculture is equally essential:

1. Shaping and leveling of farm fields for even distribution of irrigation water.
2. Development of planting and fertilizing machines.
3. Spraying and dusting machinery.
4. Mechanization of harvesting, threshing, winnowing and drying operations.

Improved agricultural tools and equipment are estimated to contribute to the food and agricultural production in India by savings in seeds (15-20%), fertilizers (15-20%), time (20-30%), and labour (20-30%); and also by increase in cropping intensity (5-20%), and productivity (10-15%).

There is a good scope of farm mechanization in India de to the following reasons: (i) improved irrigation facility in the area, (ii) introduction of high yielding varieties of seeds, (iii) introduction of high dose of fertilizers and pesticides for different crops, (iv) introduction of new crops in different crops of the country, and (v) multi-cropping system and intensive cultivation, followed in different parts of the country.

16.1 State of mechanization

Agricultural system all over the world has undergone changes in terms of cropping system, type of power sources used and application of inputs to achieve high level of productivities. Even in India, mechanization of agriculture has advanced considerably. In certain region, the level of mechanization has gone far ahead of the average level in the country. Human and animal power sources are no longer the predominant sources on Indian farms. Presently, India is the largest manufacture of tractors in the world accounting for about one third of the global production and more than 50 percent of tractors in <50 hp category. The country produced 3,45,172 tractor units in 2007-2008 of which 43,553 units were exported. There are 20 tractor manufacturers, 9 power tiller manufacturers and a number of agricultural implement and machinery manufacturers. Table 1 shows status of farm equipment manufacturing industries. Similarly about the hundred thousand pump sets are being installed on Indian farms annually. On the basis of annually critical review of the mechanization position, one observes that the shortage of labour and high labour wages are the main factors which strongly propel mechanization. Consequently, the more labour intensive operations, such pumping of irrigation water, land preparation and threshing are the first operations which are mechanized. Large amount of labour or draft power which can be replaced through machines provides a strong incentive to mechanize. Available mechanization technologies from the industrialized countries have limited scope of introduction in the developing world. Hence, indigenous solutions must be found for some of the mechanizations problems particularly for paddy production system. Efforts have to make to develop rice transplanter, rice harvester and appropriate rice milling machinery appropriate to the location specific conditions of South and South East Asian Countries.

Table 1: Status of farm equipment manufacturing industries

Equipment	Manufacturers in No.	Equipment	Manufacturers in No.
Agricultural tractors	20	Seed drills	2500
Power tillers	9	Ploughs, cultivators and harrows	5000
Earth mowers	3	Tractor parts and accessories	546
Pumps	600	Earth moving machinery & parts	188
Sprinkler sets	35	Diesel oil engine	200
Drip irrigation system	35	Rice processing industry	300
Plant protection equipment	300	Sugarcane crusher	50
Combines	48	Chaff cutter	50
Reapers	60	Dairy and food industries	500
Threshers	6000	Village craftsman	1 million

The engineering inputs in agriculture has helped the farmers in effective utilization of inputs and thereby increasing the productivity and adding value to the produce. The local farm industries have helped the farmers to supply desired improved farm machinery and post harvest equipment to modernize agriculture. To-day farmers use pumps, drip and sprinkler irrigation, cultivators, disc harrows, rotavators, seed drills, planters, pneumatic planters, power thresher, combine harvesters etc., manufactured by local industries. To meet the future food requirements, the farmers may require better production and processing technology such as precision agriculture, drip and fertigation, micro sprinkler, greenhouse modern processing and packaging technology for promotion of agri business and commercial agriculture.

References

1. Nakra, C. P. 1986**.** Farm Machinery and Equipment. Dhanpat Rai and Sons, New Delhi.
2. Klenin, N.I., Popov, I.F., and Sakun, V. A. 1985. Agricultural Machines. Amerind publishing Co. Pvt. Ltd., New Delhi.
3. Jagdishwar Sahay. 2006. Elements of Agricultural Engineering. Standard Publishers and Distributors, New Delhi.
4. Michal, A. M., and Ojha, T. P. 2008. Principles of Agricultural Engineering, Vol. I. Jain Brothers, New Delhi.
5. Kepner, R. A., Roy Bainer, and Barger, B. L. 1978. Principles of farm machinery. CBS publishers and Distributors, New Delhi.
6. Jain, S. C. 2003. Farm Machinery - An Approach. Standard Publishers and Distributors, New Delhi.
7. Surendar Singh. 2007. Farm Machinery-Principles and Applications. Indian Council of Agricultural Research, New Delhi.